July 3, 1956

T. R. LAWALL

2,752,697

FIRST AID INSTRUCTION DOLL

Filed Feb. 9, 1955

2 Sheets-Sheet 1

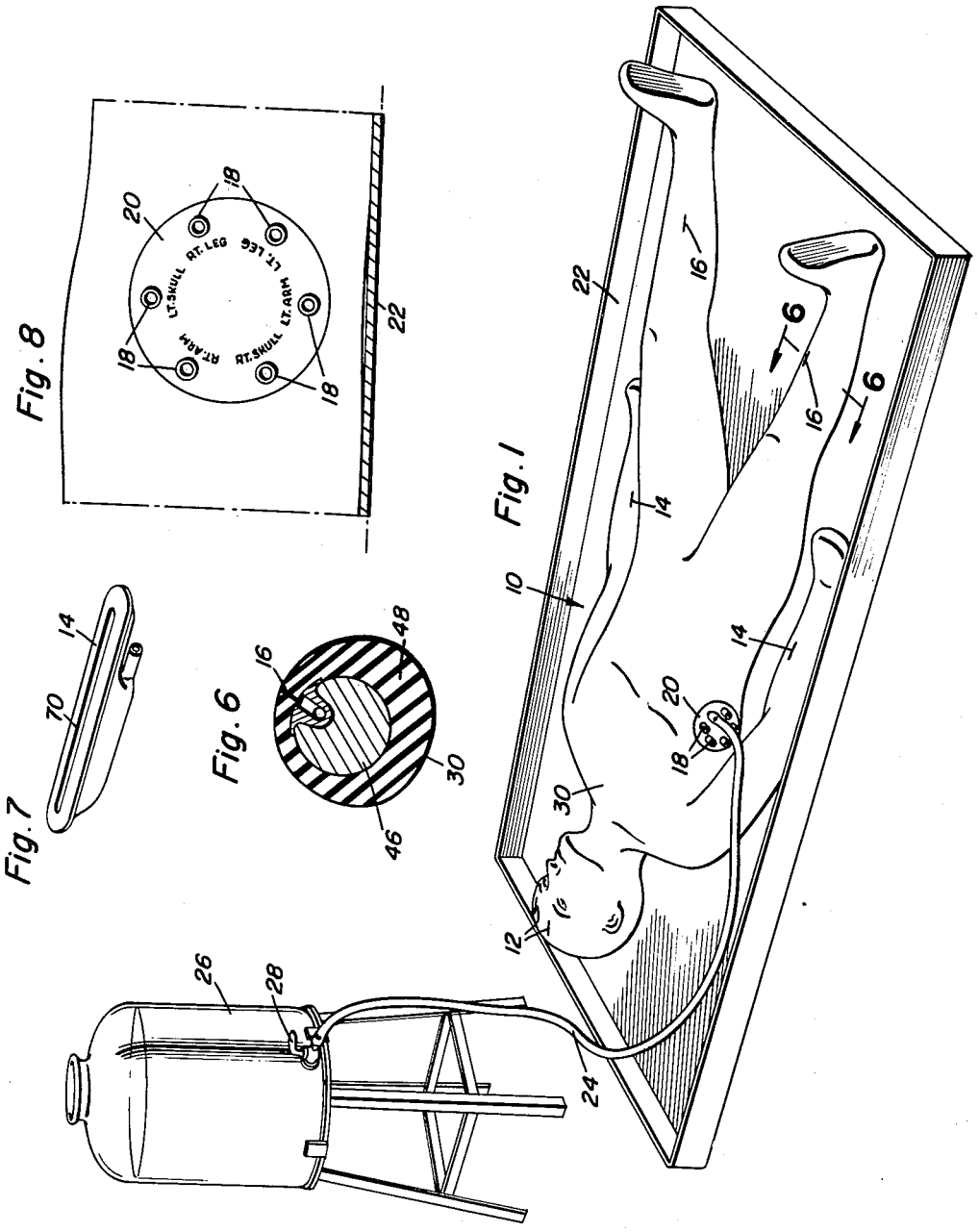

Thomas R. Lawall
INVENTOR.

BY Clarence A. O'Brien and Harvey B. Jacobson
Attorneys