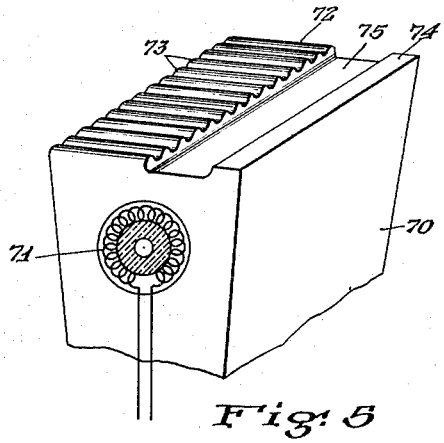

Fig. 5

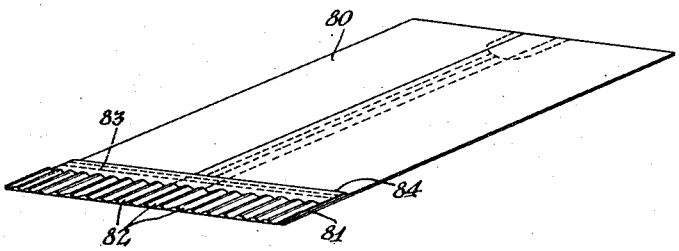

Fig. 6

INVENTOR.
Harold E. Hallman
BY
Ostrolenk, Greene & Marsen
His ATTORNEYS.