SPRAYING EQUIPMENT

Filed Dec. 5, 1966

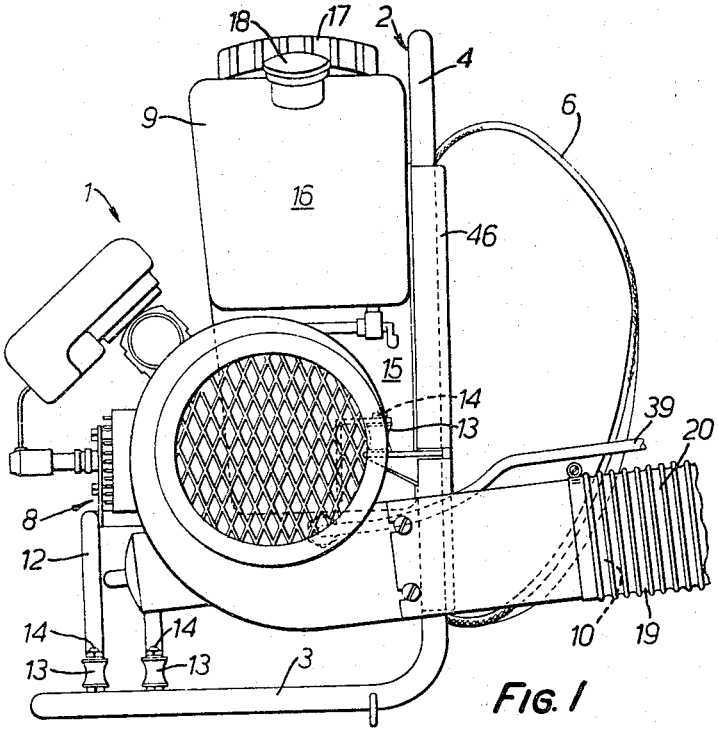

FIG. 1

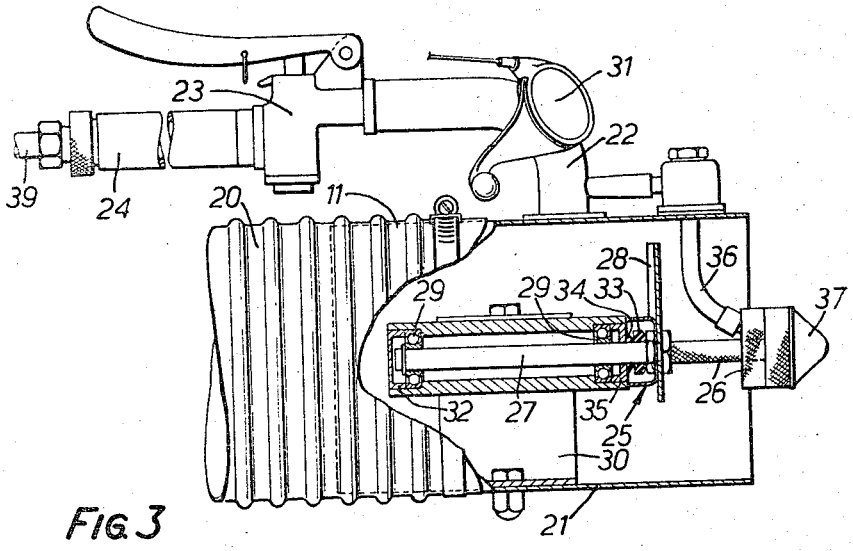

FIG. 3

INVENTOR
PETER EDMUND MARKS
BY Young & Thompson
ATTORNEYS