US005616897A

United States Patent [19]

Weber et al.

[11] **Patent Number: 5,616,897**

[45] **Date of Patent: Apr. 1, 1997**

[54] **FLEXIBLE KEYBOARD**

[76] Inventors: **Michael R. Weber**, 14535 Bruce B. Down Blvd. 2221, Tampa, Fla. 33613; **Paul J. Weber**, 2881 E. Oakland Park Blvd., Ft. Lauderdale, Fla. 33306

[21] Appl. No.: **382,446**

[22] Filed: **Feb. 2, 1995**

Related U.S. Application Data

[63] Continuation-in-part of Ser. No. 85,888, Jun. 30, 1993.

[51] **Int. Cl.**[6] **H01H 13/70**

[52] **U.S. Cl.** ..... **200/5 A**; 200/512; 364/709.08

[58] **Field of Search** ..... 200/5 R, 5 A, 200/512–517; 364/708, 709.01, 709.08, 709.11; 400/472, 473, 489, 491, 491.1, 680, 681

[56] **References Cited**

U.S. PATENT DOCUMENTS

3,940,758	2/1976	Margolin	340/537
4,121,488	10/1978	Akiyama	84/1.01
4,263,659	4/1981	Hirata et al.	364/709
4,320,573	3/1982	Larson	29/622
4,845,323	7/1989	Beggs	200/85 R
4,950,874	8/1990	Damitio et al.	235/145 R
4,952,761	8/1990	Viebrantz	200/513
5,061,830	10/1991	Ambrose	200/5 A
5,212,473	5/1993	Louis	340/711
5,220,521	6/1993	Kikinis	364/709.08
5,305,181	4/1994	Schultz	361/680
5,360,280	11/1994	Camacho et al.	400/489
5,424,728	6/1995	Goldstein	341/22
5,459,461	10/1995	Crowley et al.	341/22

Primary Examiner—Michael L. Gellner
Assistant Examiner—Michael A. Friedhofer
Attorney, Agent, or Firm—John Lezdey

[57] **ABSTRACT**

A flexible or roll-up electronic keyboard is provided for use with electronic devices. The keyboard is formed with a plurality of section of flexible plastic materials and embodies a dual-walled bottom which includes a network of support members which can be inflatable to provide a rigidity to the structure of the keyboard sufficient to prevent false signals. At least one separately inflatable accordion-pleated wedge means is also provided to enable variable adjustment of the plane or planes of the keyboard relative to the hands of its operator, sufficient to reduce the risk of nerve disorders such as carpal tunnel syndrome in the operator.
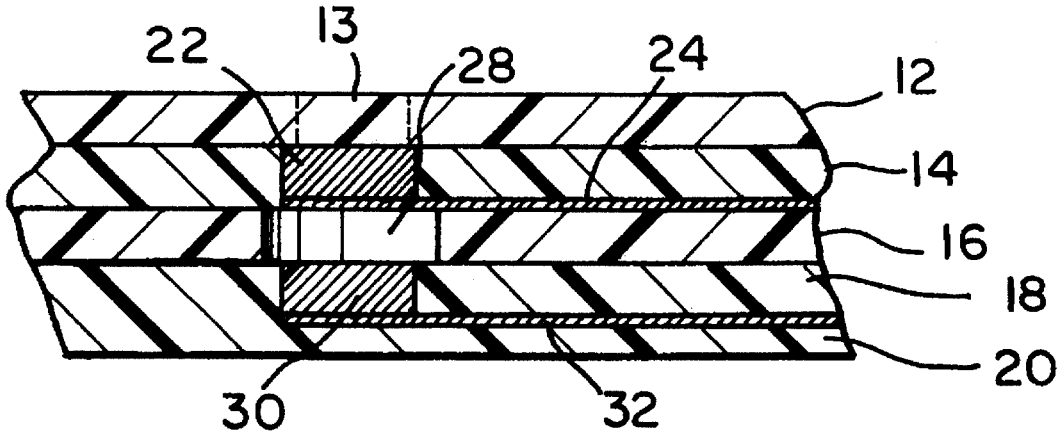
18 Claims, 6 Drawing Sheets