FIG. 2A

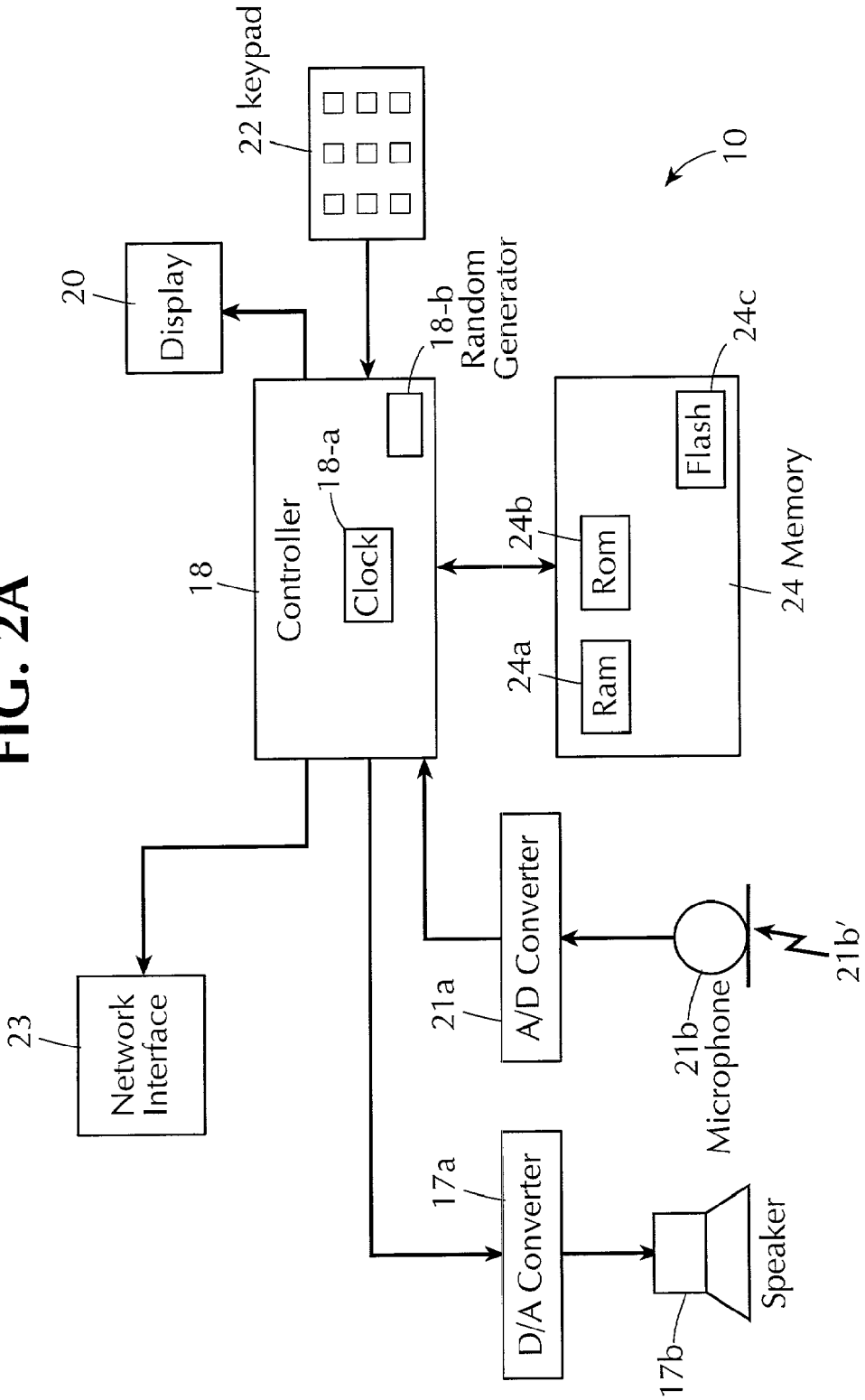
10
22 keypad
20
Display
18
Controller
18-a
Clock
18-b
Random
Generator
24b
Rom
24a
Ram
24c
Flash
24 Memory
23
Network
Interface
21a
A/D Converter
21b
Microphone
21b'
17a
D/A Converter
17b
Speaker