US00D812197S

(12) **United States Design Patent**
Garland

(10) **Patent No.: US D812,197 S**
(45) **Date of Patent: ** Mar. 6, 2018**

(54) **FAUCET HANDLE**

(71) Applicant: **DELTA FAUCET COMPANY**, Indianapolis, IN (US)

(72) Inventor: **Celine Kwok Garland**, Zionsville, IN (US)

(73) Assignee: **DELTA FAUCET COMPANY**, Indianapolis, IN (US)

(**) Term: **15 Years**

(21) Appl. No.: **29/595,256**

(22) Filed: **Feb. 27, 2017**

(51) **LOC (11) Cl.** **23-01**

(52) **U.S. Cl.**
USPC **D23/252**

(58) **Field of Classification Search**
USPC D23/238–243, 249–250, 252, 254; D8/307–308
CPC Y10T 137/9464
See application file for complete search history.

(56) **References Cited**

U.S. PATENT DOCUMENTS

D466,987 S * 12/2002 Smith D23/253
D524,918 S * 7/2006 Barry D23/254
D648,829 S * 11/2011 Gao D23/252
D734,122 S * 7/2015 Hsu D8/308
D757,908 S * 5/2016 Fritz D23/252
D785,436 S * 5/2017 Carlino D8/308
D800,269 S * 10/2017 Garland D23/252

* cited by examiner

Primary Examiner — Robert A Delehanty
(74) *Attorney, Agent, or Firm* — Edgar A. Zarins; Nirav D. Parikh

(57) **CLAIM**

The ornamental design for a faucet handle, as shown and described.

DESCRIPTION

FIG. **1** is a perspective view of a faucet handle showing my new design;
FIG. **2** is a top plan view thereof;
FIG. **3** is a first side view thereof, the opposite side being a mirror image of the side shown;
FIG. **4** is a bottom view thereof;
FIG. **5** is a first end view thereof; and,
FIG. **6** is a second end view thereof.
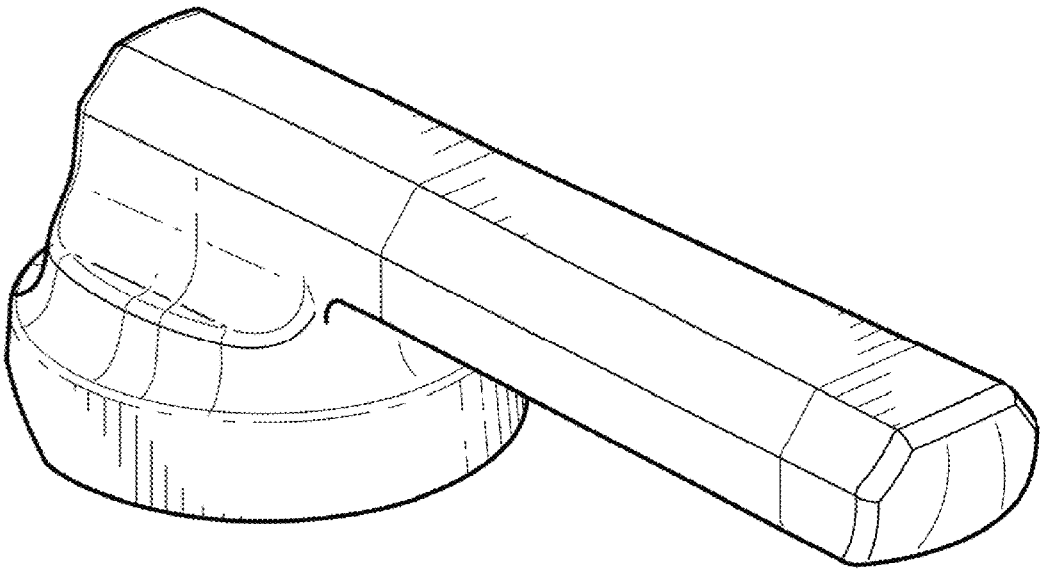
1 Claim, 1 Drawing Sheet