US009410997B2

(12) **United States Patent**
Kishi et al.

(10) **Patent No.: US 9,410,997 B2**
(45) **Date of Patent: Aug. 9, 2016**

(54) **CRYSTAL UNIT AND METHOD OF MEASURING CHARACTERISTICS OF THE CRYSTAL UNIT**

(71) Applicant: **FUJITSU LIMITED**, Kawasaki-shi, Kanagawa (JP)

(72) Inventors: **Masakazu Kishi**, Kawasaki (JP); **Masaru Itoh**, Kawasaki (JP); **Masayuki Itoh**, Kawasaki (JP)

(73) Assignee: **FUJITSU LIMITED**, Kawasaki (JP)

(*) Notice: Subject to any disclaimer, the term of this patent is extended or adjusted under 35 U.S.C. 154(b) by 0 days.

(21) Appl. No.: **14/734,175**

(22) Filed: **Jun. 9, 2015**

(65) **Prior Publication Data**

US 2016/0003877 A1 Jan. 7, 2016

(30) **Foreign Application Priority Data**

Jul. 4, 2014 (JP) 2014-138722

(51) **Int. Cl.**

H03B 5/32	(2006.01)
G01R 23/02	(2006.01)
H01Q 1/22	(2006.01)
H03B 5/06	(2006.01)
H03B 5/36	(2006.01)
H01Q 9/42	(2006.01)
G06K 19/073	(2006.01)

(52) **U.S. Cl.**

CPC ***G01R 23/02*** (2013.01); ***H01Q 1/22*** (2013.01); ***H01Q 9/42*** (2013.01); ***H03B 5/06*** (2013.01); ***H03B 5/32*** (2013.01); ***H03B 5/362*** (2013.01); *G06K 19/073* (2013.01)

(58) **Field of Classification Search**

CPC G01R 31/00; H01Q 1/22; H01Q 9/42; H03B 5/32; H03B 5/06; G06K 19/073

USPC ..... 73/718; 331/158, 116 R, 116 FE, 66, 331/36 C; 343/700 MS

See application file for complete search history.

(56) **References Cited**

U.S. PATENT DOCUMENTS

2014/0191767 A1* 7/2014 Zhou G01R 31/04 324/538

FOREIGN PATENT DOCUMENTS

JP	01-186003	A	7/1989
JP	2009-092544	A	4/2009

* cited by examiner

Primary Examiner — Arnold Kinkead

(74) *Attorney, Agent, or Firm* — Squire Patton Boggs (US) LLP

(57) **ABSTRACT**

A crystal unit may include a crystal piece, an excitation electrode configured to excite the crystal piece, a case configured to accommodate the crystal piece, an external electrode formed in the case and configured to be electrically connected to the excitation electrode, and an antenna formed in the case and configured to be electrically connected to the external electrode.
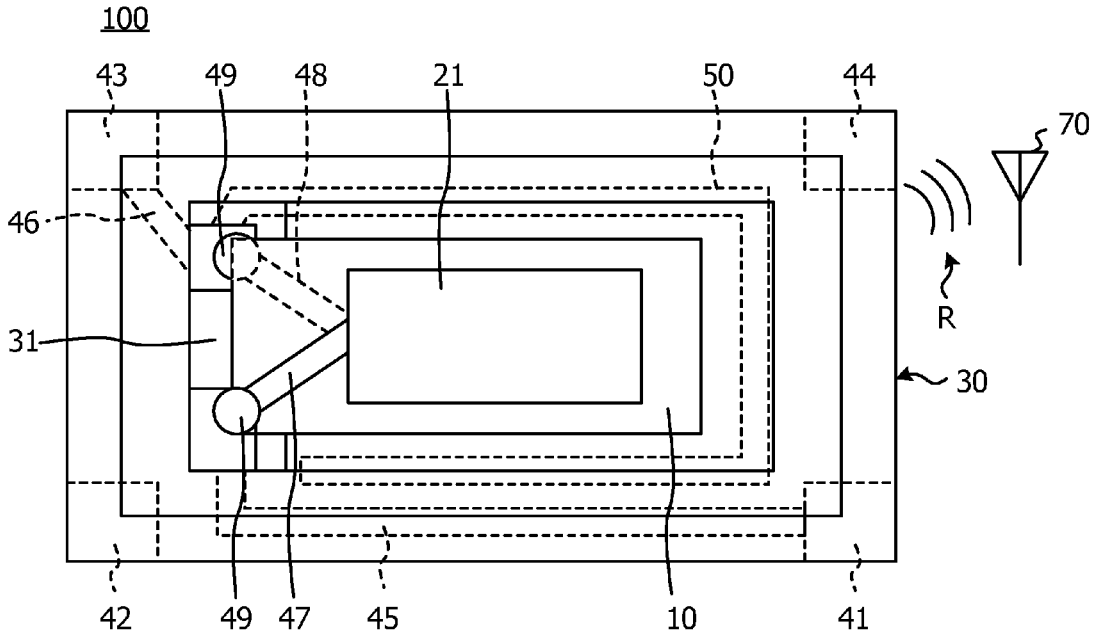
7 Claims, 7 Drawing Sheets