US009410797B2

(12) **United States Patent**
Holzapfel et al.

(10) **Patent No.: US 9,410,797 B2**
(45) **Date of Patent: Aug. 9, 2016**

(54) **OPTICAL POSITION-MEASURING DEVICE**

(71) Applicant: **DR. JOHANNES HEIDENHAIN GMBH**, Traunreut (DE)

(72) Inventors: **Wolfgang Holzapfel**, Obing (DE); **Jörg Drescher**, Samerberg (DE); **Robert Kellner**, Waging am See (DE); **Markus Meissner**, Übersee (DE)

(73) Assignee: **Dr. Johannes Heidenhain GmbH**, Traunreut (DE)

(*) Notice: Subject to any disclaimer, the term of this patent is extended or adjusted under 35 U.S.C. 154(b) by 0 days.

(21) Appl. No.: **14/508,097**

(22) Filed: **Oct. 7, 2014**

(65) **Prior Publication Data**

US 2015/0098090 A1 Apr. 9, 2015

(30) **Foreign Application Priority Data**

Oct. 7, 2013 (DE) 10 2013 220 184

(51) **Int. Cl.**
G01B 11/02 (2006.01)
G01B 11/14 (2006.01)
(Continued)

(52) **U.S. Cl.**
CPC ***G01B 11/14*** (2013.01); ***G01B 9/02049*** (2013.01); ***G01B 9/02083*** (2013.01); ***G01D 5/38*** (2013.01)

(58) **Field of Classification Search**
CPC G01D 5/38; G01D 5/34715; G01D 5/366; G01B 9/02; G01P 3/366
USPC 356/499
See application file for complete search history.

(56) **References Cited**

U.S. PATENT DOCUMENTS

6,249,626 B1 * 6/2001 Bergmann G02B 6/2817 385/48
7,483,120 B2 1/2009 Luttikhuis et al.
(Continued)

FOREIGN PATENT DOCUMENTS

EP 1 533 594 5/2005
EP 1 762 828 3/2007
(Continued)

OTHER PUBLICATIONS

European Search Report issued in European Patent Application No. 14 17 9262, dated Feb. 17, 2015.
(Continued)

Primary Examiner — Tarifur Chowdhury
Assistant Examiner — MD Rahman
(74) *Attorney, Agent, or Firm* — Kenyon & Kenyon LLP

(57) **ABSTRACT**

A position-measuring device for detecting the position of two objects movable relative to each other, includes a measuring standard that is joined to one of the two objects, as well as a scanning system for scanning the measuring standard, the scanning system being joined to the other of the two objects. The scanning system permits a simultaneous determination of position along a first lateral shift direction and along a vertical shift direction of the objects. To that end, on the part of the scanning system, two scanning beam paths are formed, in which a group of phase-shifted signals is able to be generated in each case at the output end from interfering partial beams of rays. In addition, via the scanning system, at least a third scanning beam path is formed, by which it is possible to determine position along a second lateral shift direction of the objects. The beam from a light source is able to be supplied to the scanning system via a first light guide and coupling-in optics in common for all three scanning beam paths. The interfering partial beams of rays produced in the three scanning beam paths are able to be coupled via common coupling-out optics, into a second light guide which supplies these beams of rays to a detector system.
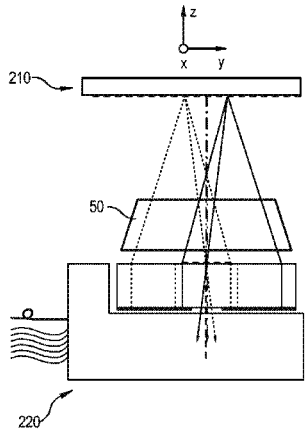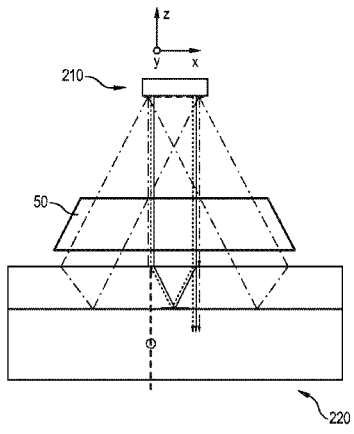
22 Claims, 10 Drawing Sheets