US009409497B1

(12) **United States Patent**
**Mizuno et al.**

(10) **Patent No.: US 9,409,497 B1**
(45) **Date of Patent: Aug. 9, 2016**

(54) **ANTI-UNLOCK TOWEL BAR**

(71) Applicant: **AISIN TECHNICAL CENTER OF AMERICA, INC.**, Northville, MI (US)

(72) Inventors: **Ryosuke Mizuno**, Novi, MI (US); **Michael Mixon**, Plymouth, MI (US)

(73) Assignee: **AISIN TECHNICAL CENTER OF AMERICA, INC.**, Northville, MI (US)

( * ) Notice: Subject to any disclaimer, the term of this patent is extended or adjusted under 35 U.S.C. 154(b) by 0 days.

(21) Appl. No.: **14/720,421**

(22) Filed: **May 22, 2015**

(51) **Int. Cl.**
***F16M 13/00*** (2006.01)
***B60N 2/08*** (2006.01)
***B60N 2/06*** (2006.01)

(52) **U.S. Cl.**
CPC ..... ***B60N 2/0881*** (2013.01); ***B60N 2/06*** (2013.01)

(58) **Field of Classification Search**
CPC ..... B60N 2/0725; B60N 2/08; B60N 2/0862; B60N 2/0881; B60N 2/06
See application file for complete search history.

(56) **References Cited**

U.S. PATENT DOCUMENTS

| | | | | |
|---|---|---|---|---|
| 3,582,033 | A * | 6/1971 | LaFleche | B60N 2/0825 248/420 |
| 3,866,876 | A * | 2/1975 | Adams | B60N 2/0705 248/292.12 |
| 4,229,041 | A * | 10/1980 | Werner | B60R 22/26 248/393 |
| 4,455,009 | A * | 6/1984 | Foster | B60N 2/0705 248/429 |
| 4,629,151 | A * | 12/1986 | Nishino | B60N 2/1839 248/396 |
| 4,779,832 | A * | 10/1988 | Rees | B60N 2/1615 248/421 |
| 5,799,920 | A | 9/1998 | Wittkowsky et al. | |
| 6,328,272 | B1 | 12/2001 | Hayakawa et al. | |
| 6,609,745 | B2 | 8/2003 | Miyahara et al. | |

* cited by examiner

*Primary Examiner* — Amy Sterling
(74) *Attorney, Agent, or Firm* — Oblon, McClelland, Maier & Neustadt, L.L.P.

(57) **ABSTRACT**

A seat apparatus including an operating handle; a slot hole bracket including at least one inclined slot, the at least one profiled slot guides the operating handle in a horizontal direction and a vertical direction based on an inclined force on the operating handle; and one or more lock brackets movably attached to the operating handle and the slot hole bracket.
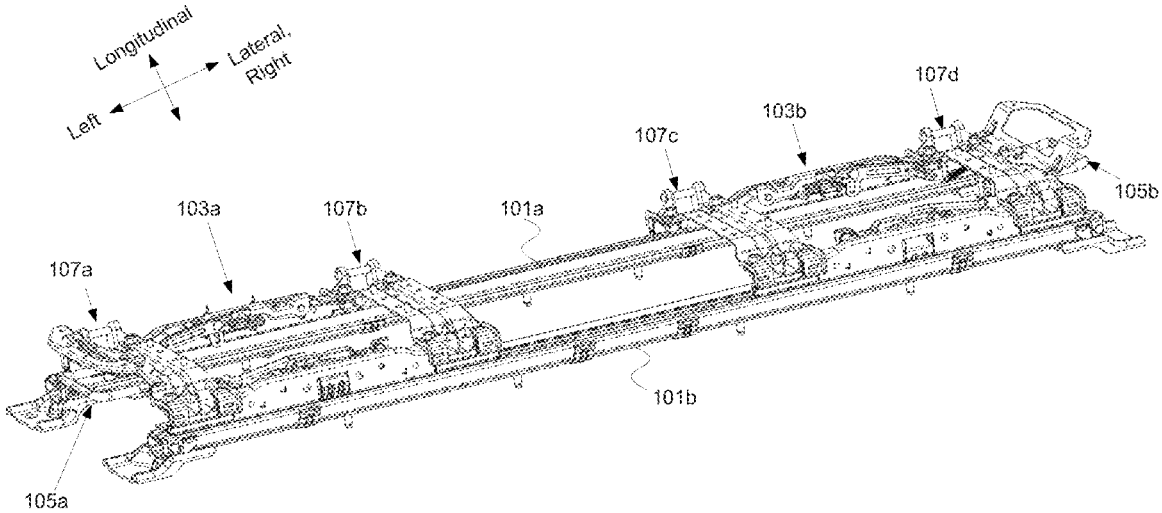
**9 Claims, 14 Drawing Sheets**