US009680496B2

(12) **United States Patent**
Kauffman et al.

(10) **Patent No.: US 9,680,496 B2**
(45) **Date of Patent: Jun. 13, 2017**

(54) **APPARATUS FOR OVERLOAD RECOVERY OF AN INTEGRATOR IN A SIGMA-DELTA MODULATOR**

(71) Applicant: **Intel IP Corporation**, Santa Clara, CA (US)

(72) Inventors: **John G. Kauffman**, Munich (DE); **Krzysztof Dufrene**, Plesching (AT)

(73) Assignee: **Intel Corporation**, Santa Clara, CA (US)

(*) Notice: Subject to any disclaimer, the term of this patent is extended or adjusted under 35 U.S.C. 154(b) by 0 days.

(21) Appl. No.: **14/751,063**

(22) Filed: **Jun. 25, 2015**

(65) **Prior Publication Data**

US 2016/0380646 A1 Dec. 29, 2016

(51) **Int. Cl.**

H03M 1/06	(2006.01)
H03M 3/00	(2006.01)
H03M 1/46	(2006.01)
H03M 1/12	(2006.01)
H03M 1/00	(2006.01)

(52) **U.S. Cl.**

CPC ***H03M 3/356*** (2013.01); ***H03M 1/0607*** (2013.01); ***H03M 1/46*** (2013.01); ***H03M 3/464*** (2013.01); *H03M 1/00* (2013.01); *H03M 1/12* (2013.01)

(58) **Field of Classification Search**

CPC H03M 1/00; H03M 1/12
USPC 341/118, 120, 155, 156, 122
See application file for complete search history.

(56) **References Cited**

U.S. PATENT DOCUMENTS

4,630,102	A *	12/1986	Wargo	H04N 9/68 348/646
5,742,246	A *	4/1998	Kuo	H03M 3/362 341/143
6,453,181	B1 *	9/2002	Challa	H03L 1/00 455/343.4
8,884,629	B1 *	11/2014	Kumar	H03F 1/0277 324/523
2009/0278719	A1 *	11/2009	Braswell	H03M 3/362 341/143
2011/0200161	A1 *	8/2011	Tasic	H03K 21/08 377/48

OTHER PUBLICATIONS

Mitteregger, G. et al., "A 20-mW 640-MHz CMOS Continuous-Time Σα ADC Wth 20-MHz Signal Bandwidth, 80-dB Dynamic Range and 12- bit ENOB", IEEE Journal of Solid-State Circuits, vol. 41, pp. 2641-2649, Dec. 2006, pp. 2641-2649 (9 pages).

* cited by examiner

Primary Examiner — Joseph Lauture
(74) *Attorney, Agent, or Firm* — Green, Howard & Mughal LLP

(57) **ABSTRACT**

Described is an apparatus which comprises: a first integrator to receive an input signal and to generate a first output; a second integrator to receive the first output or a version of the first output and to generate a second output; and an analog-to-digital converter (ADC) to quantize the second output into a digital representation, the ADC including a detection circuit to detect an overload condition in the second output.
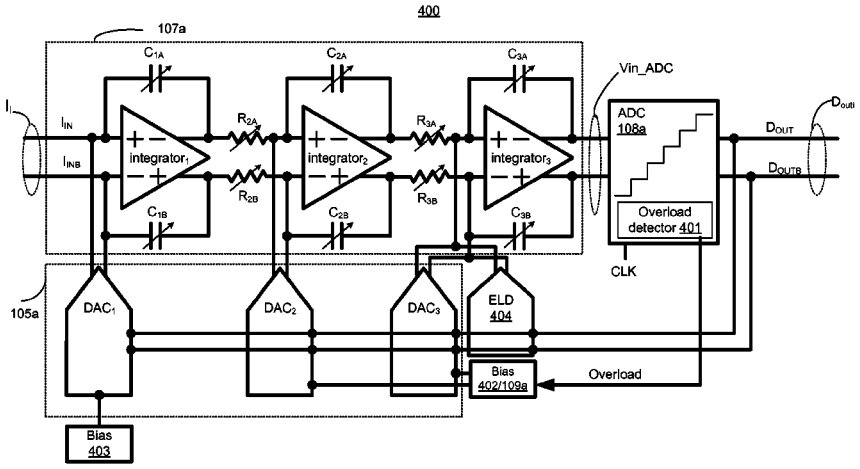
19 Claims, 7 Drawing Sheets