US005877896A

United States Patent [19]

Gremban

[11] **Patent Number: 5,877,896**

[45] **Date of Patent: Mar. 2, 1999**

[54] **COMPUTER SCREEN PRIVACY AND LIGHT SHADE ACCESSORY**

[75] Inventor: **Ronald Dean Gremban**, Corte Madera, Calif.

[73] Assignee: **Forsites Software Development Corporation**, Corte Madera, Calif.

[21] Appl. No.: **789,997**

[22] Filed: **Jan. 28, 1997**

[51] **Int. Cl.**[6] **G02B 27/00**; G02B 21/00; H04N 5/64

[52] **U.S. Cl.** **359/601**; 359/610; 348/842

[58] **Field of Search** 359/601, 610, 359/611, 612, 613; 348/834, 842; 248/346.3, 346.5

[56] **References Cited**

U.S. PATENT DOCUMENTS

3,564,138	2/1971	Harrold	348/842
4,314,280	2/1982	Rose	348/842
4,784,468	11/1988	Tierney	359/601
5,101,298	3/1992	Lentz et al.	359/612
5,218,474	6/1993	Kirschner	359/601
5,325,970	7/1994	Dillon et al.	206/576
5,717,566	2/1998	Tao	361/681

Primary Examiner—Cassandra C. Spyrou
Assistant Examiner—Mark A. Robinson

[57] **ABSTRACT**

A privacy and light shade accessory for the screen member of a laptop computer in its viewing position having a base member directly or indirectly mountable on the laptop computer provided with pivotal shade panels movable between a folded storage position and an unfolded operative screen shielding position. In two embodiments of the invention, the shade panels are pivotally attached directly to a base member comprising a cover of a laptop computer carrying case. In a third embodiment, the base member and shade panels are releasably attached to an outer rear surface of the screen member of the computer.
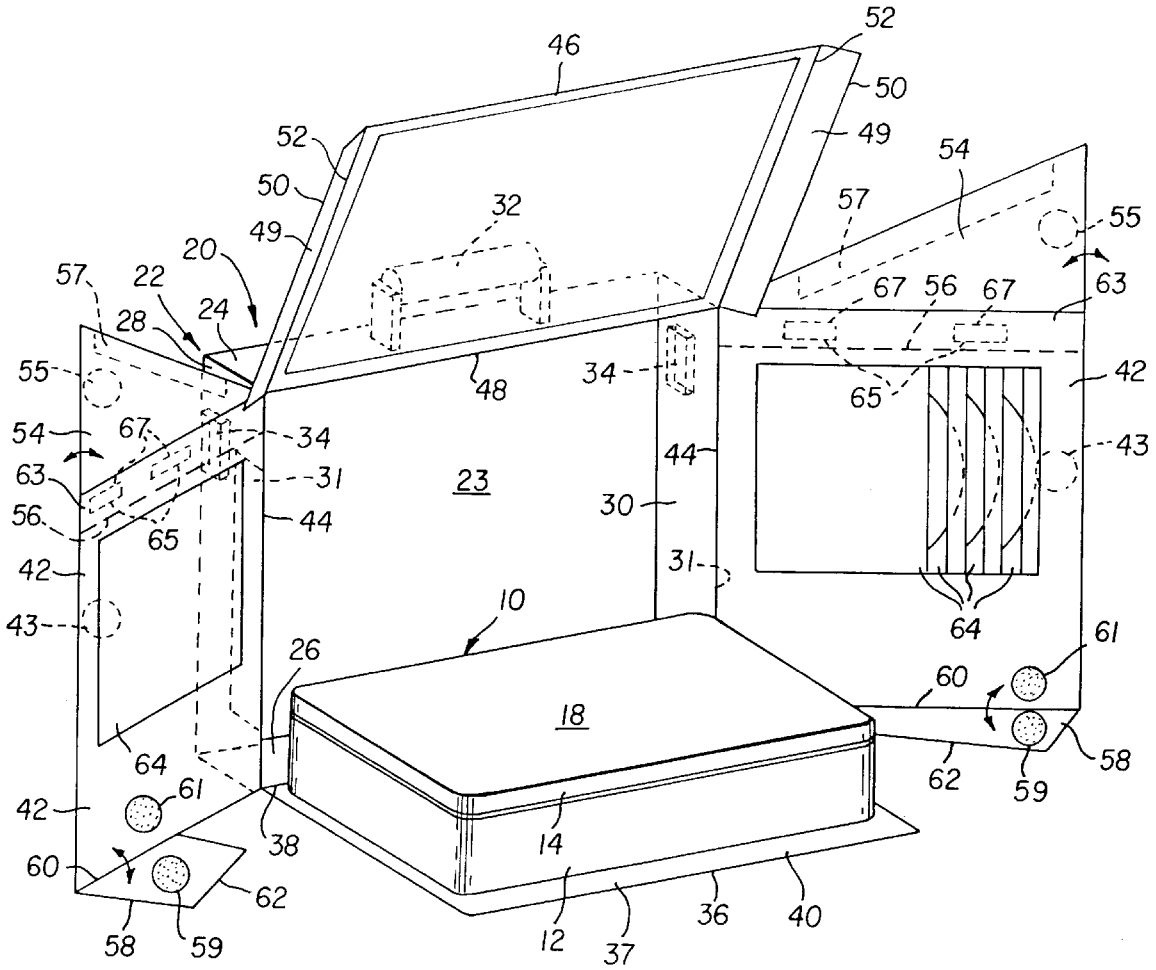
20 Claims, 18 Drawing Sheets