United States Patent [19]

Harbour et al.

[11] **4,272,596**

[45] **Jun. 9, 1981**

[54] **ELECTROPHORETIC DISPLAY DEVICE**

[75] Inventors: **John R. Harbour**, Mississauga; **Michael L. Hair**, Oakville, both of Canada

[73] Assignee: **Xerox Corporation**, Stamford, Conn.

[21] Appl. No.: **44,802**

[22] Filed: **Jun. 1, 1979**

[51] **Int. Cl.**[3] **C25D 1/12**; G03G 13/00

[52] **U.S. Cl.** **430/37**; 430/38

[58] **Field of Search** ..... 427/14; 204/181 R; 430/37, 38

[56] **References Cited**

U.S. PATENT DOCUMENTS

Re. 28,360	3/1975	Evans et al.	358/56
1,963,496	6/1934	Land	88/61
3,666,472	5/1972	Till et al.	96/88
3,668,106	6/1972	Ota	204/180 R
3,708,219	1/1973	Forlini et al.	350/150
3,850,506	11/1974	Johnson et al.	350/160 P
3,876,288	4/1975	Iwata	350/160
4,126,528	11/1978	Chiang	204/181

Primary Examiner—Bernard D. Pianalto

[57] **ABSTRACT**

An electrophoretic display device which provides high contrast images and a stable suspending fluid is described. A white marking material such as titanium dioxide is suspended in a colloidal dispersion containing black colorant such as colloidal size iron oxide particles known as ferrofluids. Image formation is achieved electrophoretically by selective application of an electric field across the imaging suspension.
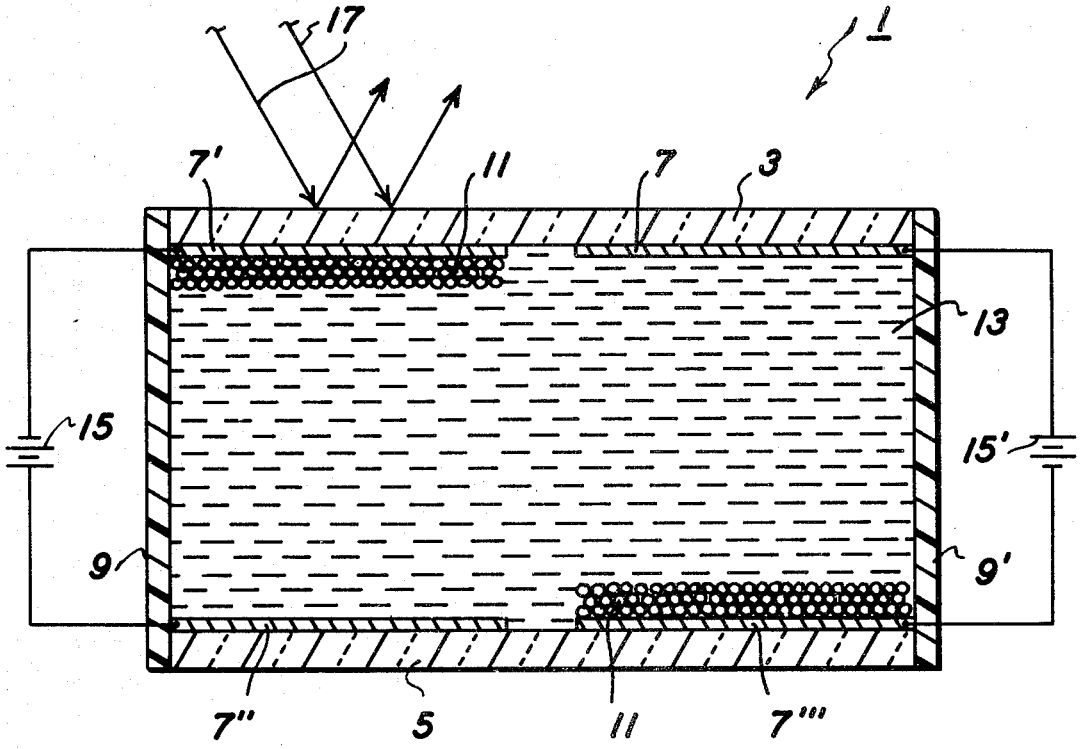
9 Claims, 1 Drawing Figure