US008968396B2

(12) **United States Patent**
Matthews et al.

(10) **Patent No.: US 8,968,396 B2**
(45) **Date of Patent: Mar. 3, 2015**

(54) **INTRAOCULAR LENS DELIVERY SYSTEMS AND METHODS OF USE**

(71) Applicant: **PowerVision, Inc.**, Belmont, CA (US)

(72) Inventors: **Gregory Vinton Matthews**, San Francisco, CA (US); **Terah Whiting Smiley**, San Francisco, CA (US); **John A. Scholl**, San Ramon, CA (US)

(73) Assignee: **PowerVision, Inc.**, Belmont, CA (US)

(*) Notice: Subject to any disclaimer, the term of this patent is extended or adjusted under 35 U.S.C. 154(b) by 0 days.

(21) Appl. No.: **13/835,876**

(22) Filed: **Mar. 15, 2013**

(65) **Prior Publication Data**

US 2014/0012277 A1 Jan. 9, 2014

Related U.S. Application Data

(63) Continuation-in-part of application No. 12/178,565, filed on Jul. 23, 2008.

(60) Provisional application No. 60/951,439, filed on Jul. 23, 2007, provisional application No. 61/613,929, filed on Mar. 21, 2012.

(51) **Int. Cl.**
A61F 2/16 (2006.01)

(52) **U.S. Cl.**
CPC ***A61F 2/1675*** (2013.01); ***A61F 2/167*** (2013.01); ***A61F 2/1678*** (2013.01)
USPC **623/6.12**

(58) **Field of Classification Search**
USPC 606/107; 623/6.12, 6.11, 905–907
See application file for complete search history.

(56) **References Cited**

U.S. PATENT DOCUMENTS

4,111,995	A	9/1978	Nelson
4,251,887	A	2/1981	Anis
4,253,199	A	3/1981	Banko
4,254,509	A	3/1981	Tennant
4,304,895	A	12/1981	Loshaek
4,373,218	A	2/1983	Schachar
4,409,691	A	10/1983	Levy
4,423,809	A	1/1984	Mazzocco
4,435,856	A	3/1984	L'Esperance
4,466,705	A	8/1984	Michelson
4,490,860	A	1/1985	Rainin
4,494,254	A	1/1985	Lopez
4,512,040	A	4/1985	McClure
4,528,311	A	7/1985	Beard et al.
4,575,373	A	3/1986	Johnson
4,585,457	A	4/1986	Kalb
4,600,004	A	7/1986	Lopez et al.
4,604,295	A	8/1986	Humphreys

(Continued)

FOREIGN PATENT DOCUMENTS

CN	101277659	A	10/2008
EP	0898972	A2	3/1999

(Continued)

OTHER PUBLICATIONS

Baughman et al., "Negative poisson's ratios for extreme states of matter," Science, vol. 288, pp. 2018-2022, Jun. 16, 2000.

(Continued)

Primary Examiner — Ashley Fishback
(74) *Attorney, Agent, or Firm* — Shay Glenn LLP

(57) **ABSTRACT**

Intraocular lens delivery devices and methods of use.
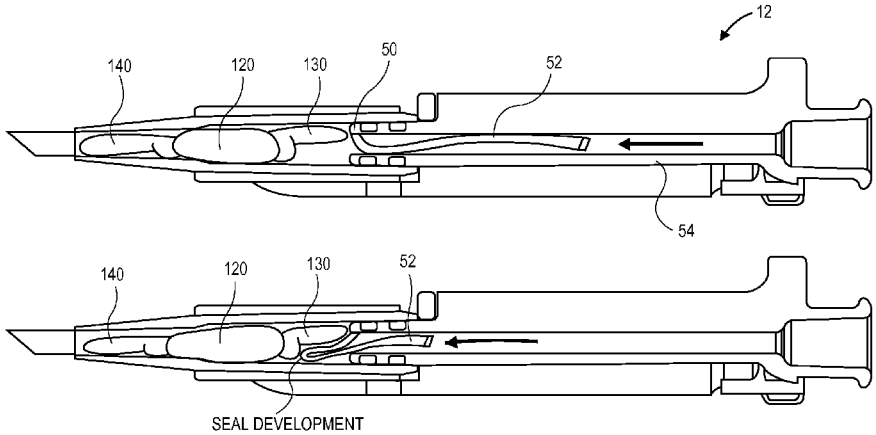
35 Claims, 17 Drawing Sheets