US005266296A

United States Patent [19]

Bortle, Jr. et al.

[11] Patent Number: 5,266,296

[45] Date of Patent: Nov. 30, 1993

[54] COCURRENT FLOW PROCESS FOR THE MANUFACTURE OF SODIUM SULFITE AND BISULFITE SOLUTIONS

[75] Inventors: **Walter H. Bortle, Jr.**, Cochranville, Pa.; **Samuel L. Bean**, Wilmington, Del.; **Mark D. Dulik**, West Chester, Pa.

[73] Assignee: **General Chemical Corporation**, Parsippany, N.J.

[21] Appl. No.: **644,213**

[22] Filed: **Jan. 22, 1991**

[51] **Int. Cl.**[5] **C01B 17/62**

[52] **U.S. Cl.** **423/519.2**; 423/519; 423/539; 423/421

[58] **Field of Search** ..... 423/181, 202, 421, 519, 423/539, 512 A; 261/96, DIG. 26

[56] **References Cited**

U.S. PATENT DOCUMENTS

830,996	9/1906	Heath	423/519
1,484,818	2/1924	Drewsen	423/519
1,499,898	7/1924	Wolf	423/519
1,937,944	12/1933	Butler	23/129
2,004,799	6/1935	Richardson	23/129
2,042,477	6/1936	Miller	423/519
2,080,528	5/1937	Bowman et al.	23/129
2,147,162	2/1937	Haglund	423/519
2,245,697	6/1941	Melendy	423/519
2,656,249	10/1953	Gray et al.	23/130
2,719,075	9/1955	Allen	23/129
2,899,273	8/1959	Murphy	23/129
3,098,710	7/1963	Ahlborg	423/202
3,361,524	1/1968	Spormann et al.	23/129
3,615,199	10/1971	Terrana	23/178
3,764,653	10/1973	Urban	423/242
3,860,695	1/1975	Metzger	423/519
3,995,015	11/1976	Bean	423/519
4,003,985	1/1977	Hoffman et al.	423/512 A
4,112,061	9/1978	Hoffmann et al.	423/512 A
4,191,736	3/1980	Chay	423/482
4,246,245	1/1981	Abrams	423/242
4,425,313	1/1984	Cooper	423/235
4,452,766	6/1984	Pike	423/242

FOREIGN PATENT DOCUMENTS

1517198	4/1971	Fed. Rep. of Germany	423/519

OTHER PUBLICATIONS

Benedikter, R. A., *Gmelin's Handbook*, Feb. 1, 1974.

Primary Examiner—Gary P. Straub
Assistant Examiner—Timothy C. Vanoy
Attorney, Agent, or Firm—Brumbaugh, Graves, Donohue & Raymond

[57] **ABSTRACT**

Sodium (bi)sulfites are produced by the steps of:

(a) introducing a stream of aqueous sodium carbonate into the top end of a main packed column reactor;

(b) introducing a stream of sulfur dioxide gas into the top end of the main packed column reactor concurrently with the stream of aqueous sodium carbonate;

(c) allowing the aqueous sodium carbonate and sulfur dioxide to cocurrently flow downward from the top end of the main packed column reactor to the bottom of the column in a cocurrent flow, during which flow reaction occurs between the aqueous sodium carbonate and the sulfur dioxide to produce sodium (bi)sulfite; and

(d) recovering the product sodium (bi)sulfite and a gas stream containing any excess sulfur dioxide from the bottom of the main packed column reactor. The product (bi)sulfite can be separated from the gas stream in a separate receiving vessel and then the gas is sent to a scrubber to remove residual SO_2. The scrubber may be a second packed column reactor operating with cocurrent flow.
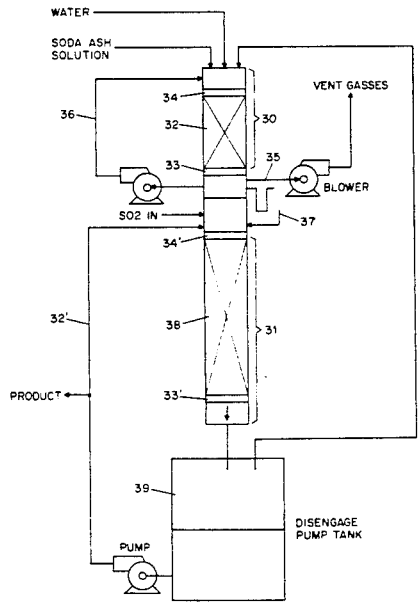
5 Claims, 2 Drawing Sheets