US008564596B2

(12) **United States Patent**
Carrino et al.

(10) **Patent No.: US 8,564,596 B2**
(45) **Date of Patent: Oct. 22, 2013**

(54) **TECHNIQUES FOR DENSITY MAPPING**

(75) Inventors: **John Antonio Carrino**, Palo Alto, CA (US); **Daniel Patrick Cervelli**, Menlo Park, CA (US)

(73) Assignee: **Palantir Technologies, Inc.**, Palo Alto, CA (US)

(*) Notice: Subject to any disclaimer, the term of this patent is extended or adjusted under 35 U.S.C. 154(b) by 846 days.

(21) Appl. No.: **12/686,232**

(22) Filed: **Jan. 12, 2010**

(65) **Prior Publication Data**

US 2011/0170799 A1 Jul. 14, 2011

(51) **Int. Cl.**
G06T 15/10 (2011.01)

(52) **U.S. Cl.**
USPC **345/427**; 345/423

(58) **Field of Classification Search**
USPC 345/427, 423; 382/285; 701/200
See application file for complete search history.

(56) **References Cited**

U.S. PATENT DOCUMENTS

4,899,161	A	2/1990	Morin et al.	
4,958,305	A	9/1990	Piazza	
5,781,195	A	7/1998	Marvin	
5,781,704	A *	7/1998	Rossmo	706/45
6,157,747	A	12/2000	Szeliski et al.	
6,389,289	B1	5/2002	Voce et al.	
6,529,900	B1	3/2003	Patterson et al.	
6,757,445	B1 *	6/2004	Knopp	382/285
7,375,732	B2	5/2008	Arcas	
7,519,470	B2	4/2009	Brasche et al.	
7,529,195	B2	5/2009	Gorman	
7,558,677	B2	7/2009	Jones	
7,663,621	B1	2/2010	Allen et al.	
7,791,616	B2 *	9/2010	Ioup et al.	345/606
7,872,647	B2	1/2011	Mayer et al.	
2003/0052896	A1 *	3/2003	Higgins et al.	345/619
2004/0030492	A1 *	2/2004	Fox et al.	701/208
2004/0039498	A1	2/2004	Ollis et al.	
2004/0098236	A1 *	5/2004	Mayer et al.	703/2
2005/0031197	A1 *	2/2005	Knopp	382/154

(Continued)

FOREIGN PATENT DOCUMENTS

EP	0 763 201	A2	3/1997
WO	WO 2005/013200	A1	2/2005

OTHER PUBLICATIONS

Levine, N. (2006). "Crime Mapping and the CrimeStat Program", Geographical Analysis, vol. 38, Issue 1, Jan. 2006, pp. 41-56.*

(Continued)

Primary Examiner — Maurice L McDowell, Jr.
(74) *Attorney, Agent, or Firm* — Hickman Palermo Truong Becker Bingham Wong LLP

(57) **ABSTRACT**

Techniques in a data processor for drawing a density surface on a map in a manner that more accurately accounts for projection distortion in the map. According to one embodiment, data is maintained that represents a geotagged event. A map plane is divided into a plurality of cells and an origin cell corresponding to the geotagged event is identified. Density values are allocated to cells surrounding the origin cell based on geodetic distances between geographic coordinates corresponding to surrounding cells and the geographic coordinate of the geotagged event. A density surface based on the cell allocations is then displayed on a map. By allocating density values to cells based on geodetic distances, the resulting density surface displayed on the map more accurately accounts for projection distortions in the area of the map on which density surface is displayed.
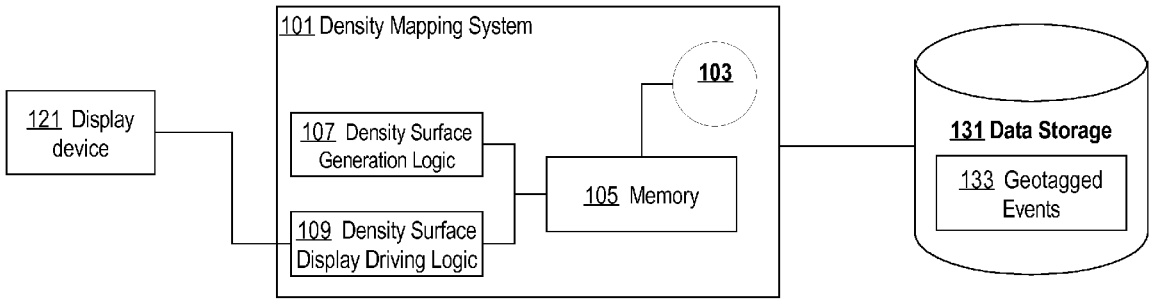
29 Claims, 6 Drawing Sheets
(1 of 6 Drawing Sheet(s) Filed in Color)