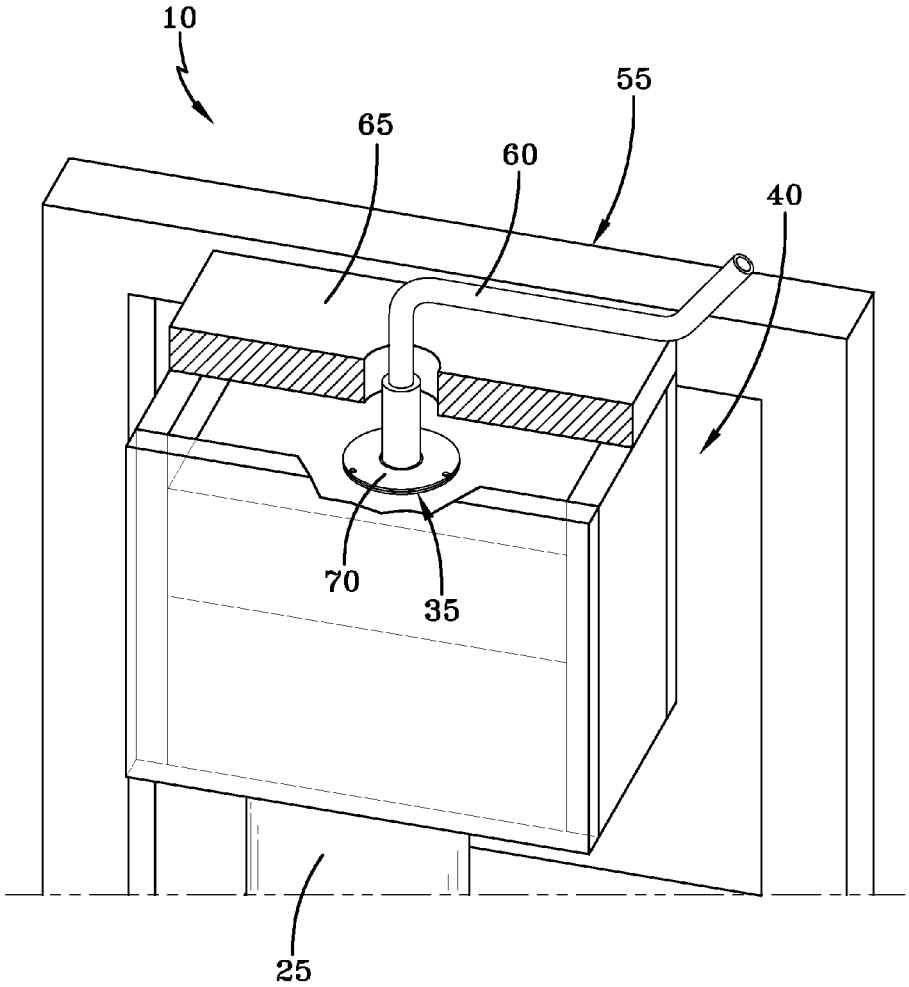

FIG–2