US008356696B1

(12) **United States Patent**
Carroll et al.

(10) **Patent No.: US 8,356,696 B1**
(45) **Date of Patent: Jan. 22, 2013**

(54) **AIR-OPERATED DEVICE AND METHOD FOR LUBRICATING COMPONENTS WITH ELIMINATION OF LUBRICANT WASTE**

(75) Inventors: **Brian Carroll**, Leeds, AL (US); **Michael Neu**, Oxford, AL (US); **Chris Petty**, Anniston, AL (US); **Dudley Headley**, Cropwell, AL (US); **David McCoy**, Leeds, AL (US); **Stephen Smith**, Munford, AL (US)

(73) Assignee: **Honda Motor Co., Ltd.**, Tokyo (JP)

(*) Notice: Subject to any disclaimer, the term of this patent is extended or adjusted under 35 U.S.C. 154(b) by 380 days.

(21) Appl. No.: **12/483,931**

(22) Filed: **Jun. 12, 2009**

(51) **Int. Cl.**

F01M 1/00	(2006.01)
F01M 11/00	(2006.01)
F16N 7/34	(2006.01)
B05B 5/025	(2006.01)
B05B 7/00	(2006.01)
A61M 11/06	(2006.01)

(52) **U.S. Cl.** **184/6.26**; 184/6.28; 184/55.1; 118/634; 118/300; 118/50; 118/629; 118/64; 239/338

(58) **Field of Classification Search** 184/6.26, 184/6.21, 6.23, 6.28, 7.4, 55.1, 55.2, 26, 184/40, 50.2; 118/326, 309, 634, 50, 300, 118/313, 314, 315, 316, 239, 629, 64; 73/10; 34/585; 239/338

See application file for complete search history.

(56) **References Cited**

U.S. PATENT DOCUMENTS

3,131,869	A	5/1964	Vega et al.	
3,421,702	A *	1/1969	O'Brien	239/418
3,491,855	A *	1/1970	Obergefell et al.	184/55.1
3,618,709	A *	11/1971	Boelkins	184/6.4
3,731,393	A *	5/1973	Okada et al.	34/369
4,284,174	A	8/1981	Salvana et al.	
4,338,958	A *	7/1982	Fujita	134/104.2
4,353,435	A *	10/1982	Abrams et al.	184/6.26
4,421,798	A *	12/1983	Lin	427/209
5,067,591	A	11/1991	Fehlig	
5,449,051	A	9/1995	Liao	
5,690,995	A *	11/1997	Fischli et al.	427/180
5,806,630	A *	9/1998	Bernal	184/6.26
6,199,663	B1 *	3/2001	Roy et al.	184/55.1
6,264,745	B1 *	7/2001	Diaz	118/326
6,390,241	B1	5/2002	Nemie, Jr.	
6,405,944	B1 *	6/2002	Benalikhoudja	239/338
6,474,445	B2	11/2002	Nemie, Jr.	
6,659,370	B1 *	12/2003	Inoue	239/423
6,679,484	B2 *	1/2004	Hattori	261/64.1
6,896,103	B2	5/2005	Naumann et al.	
6,898,959	B2	5/2005	Sekine et al.	
7,014,670	B2 *	3/2006	Shutic et al.	55/315
7,407,118	B2 *	8/2008	Sevy	239/347
2005/0056490	A1 *	3/2005	Maret et al.	184/6.2
2006/0070421	A1 *	4/2006	Landvatter et al.	72/342.3
2008/0083676	A1 *	4/2008	DePaul	210/774

* cited by examiner

Primary Examiner — Michael Mansen
Assistant Examiner — Minh Truong
(74) *Attorney, Agent, or Firm* — Standley Law Group LLP

(57) **ABSTRACT**

A system and method for lubricating components where the lubricant is applied in mist form within a substantially enclosed cavity. The cavity contains a draining aperture which collects excess lubricant for subsequent re-use by the system. The cavity is defined by a spray head that includes a base having attached thereto a cover plate with an opening adapted to receive therethrough a component to be lubricated. The cavity and lubrication chamber prevents the escape of excess lubricant. The collection and reuse of excess lubricant provides a closed loop system that reduces lubricant waste.
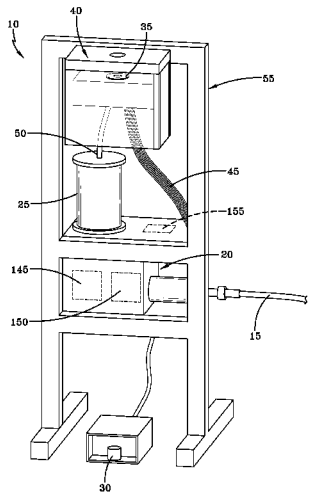
19 Claims, 4 Drawing Sheets