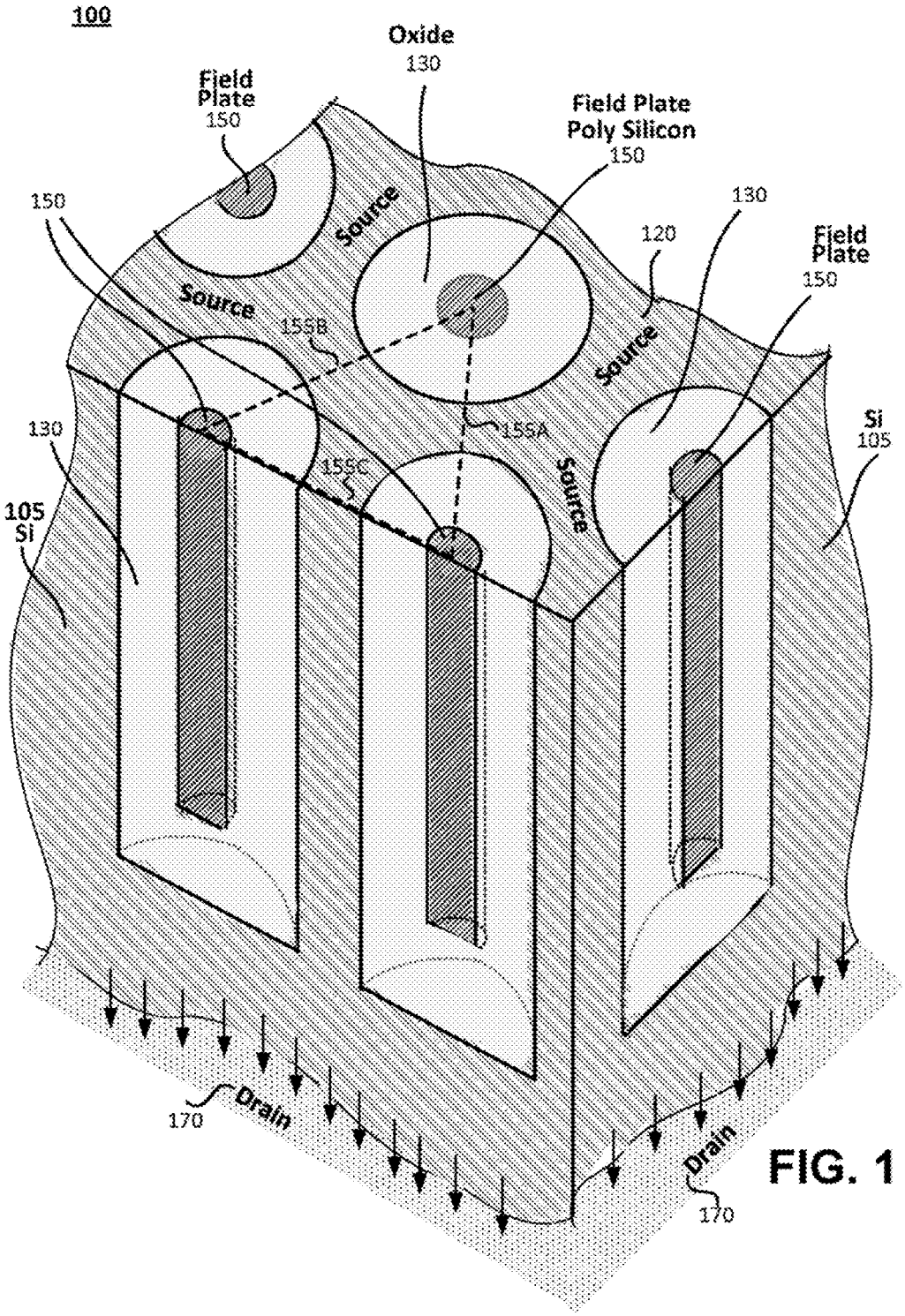
100
Oxide
130
Field
Plate
150
Field Plate
Poly Silicon
150
150
Source
Source
130
120
Field
Plate
150
155B
Source
155A
Si
105
130
155C
Source
105
Si
Drain
170
Drain
170

FIG. 1