US009638496B2

(12) **United States Patent**
Peters et al.

(10) **Patent No.: US 9,638,496 B2**
(45) **Date of Patent: May 2, 2017**

(54) **ANTI-BALLISTIC HANDLING CASES, BOXES AND CONTAINERS**

(71) Applicant: **SHIELDPRO, LLC**, Irvine, CA (US)

(72) Inventors: **Fred E. Peters**, Orange, CA (US); **Jens Wemhoener**, Aachen (DE); **Peter Mowbray**, Tustin, CA (US)

(73) Assignee: **SHIELDPRO, LLC**, Irvine, CA (US)

(*) Notice: Subject to any disclaimer, the term of this patent is extended or adjusted under 35 U.S.C. 154(b) by 0 days.

(21) Appl. No.: **14/277,605**

(22) Filed: **May 14, 2014**

(65) **Prior Publication Data**

US 2015/0184982 A1 Jul. 2, 2015

Related U.S. Application Data

(60) Provisional application No. 61/823,333, filed on May 14, 2013.

(51) **Int. Cl.**

F41H 5/04	(2006.01)
F41H 5/08	(2006.01)
F42B 39/24	(2006.01)
F41H 5/013	(2006.01)

(52) **U.S. Cl.**

CPC ***F41H 5/0478*** (2013.01); ***F41H 5/08*** (2013.01); ***F42B 39/24*** (2013.01); *F41H 5/013* (2013.01)

(58) **Field of Classification Search**

CPC B65D 90/32; B65D 90/325; F42B 39/00; F42B 39/14; F42B 39/20; F42B 39/22; F42B 39/24; F42B 39/26; F42B 39/30

USPC 89/36.01; 220/560.01, 88.1

See application file for complete search history.

(56) **References Cited**

U.S. PATENT DOCUMENTS

2,601,525	A	*	6/1952	Howald et al.	220/560.02
3,304,194	A	*	2/1967	Dabrowski	428/165
4,899,420	A	*	2/1990	Bye et al.	16/16
5,031,733	A	*	7/1991	Chang	190/1
5,149,203	A	*	9/1992	Sacks	383/111
5,401,096	A	*	3/1995	Stang	312/319.2
5,464,115	A	*	11/1995	Tisbo et al.	220/324
5,551,562	A	*	9/1996	Beretta	206/317
5,776,838	A	*	7/1998	Dellinger	442/200
5,829,586	A	*	11/1998	Mermell	206/317
5,881,874	A	*	3/1999	McKinney	206/315.11
6,161,738	A		12/2000	Norris	
D441,954	S	*	5/2001	Parker	D3/279

(Continued)

FOREIGN PATENT DOCUMENTS

CN	103884239	A	6/2014
GB	2242619	A	9/1991
WO	2012018986	A1	2/2012

OTHER PUBLICATIONS

Extended European Search Report received in related European patent application No. 14798568.3 dated Nov. 11, 2016, 7 pages.

Primary Examiner — Joshua Freeman

(74) *Attorney, Agent, or Firm* — Procopio, Cory, Hargreaves & Savitch LLP; Noel C. Gillespie

(57) **ABSTRACT**

An Anti-Ballistic Handling Case including a body having a plurality of body side walls forming a hollow interior region; a lid having a plurality of a lid side walls, wherein the lid is attached to the body and configured to cover the body portion to enclose the hollow interior region of the body; and an anti-ballistic portion disposed adjacent to at least one of the plurality of body side walls, and the plurality of lid side walls.
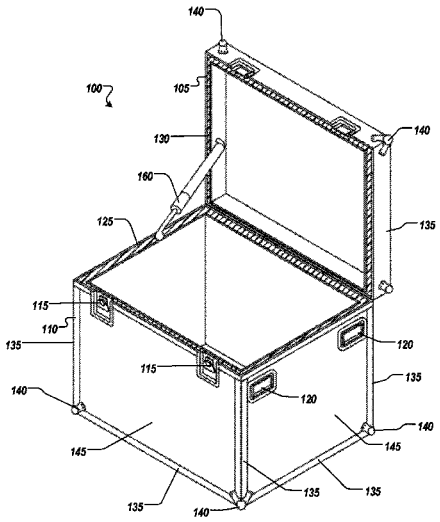
40 Claims, 6 Drawing Sheets