US009638396B2

(12) **United States Patent**
Kadomi et al.

(10) **Patent No.: US 9,638,396 B2**
(45) **Date of Patent: May 2, 2017**

(54) **WAVELENGTH CONVERSION ELEMENT AND LIGHT SOURCE PROVIDED WITH SAME**

(75) Inventors: **Masaaki Kadomi**, Otsu (JP); **Yoshimasa Yamaguchi**, Otsu (JP); **Takashi Nishimiya**, Otsu (JP)

(73) Assignee: **NIPPON ELECTRIC GLASS CO., LTD.**, Shiga (JP)

(*) Notice: Subject to any disclaimer, the term of this patent is extended or adjusted under 35 U.S.C. 154(b) by 0 days.

(21) Appl. No.: **13/821,581**

(22) PCT Filed: **Oct. 14, 2011**

(86) PCT No.: **PCT/JP2011/073611**

§ 371 (c)(1),
(2), (4) Date: **Mar. 8, 2013**

(87) PCT Pub. No.: **WO2012/066881**

PCT Pub. Date: **May 24, 2012**

(65) **Prior Publication Data**

US 2013/0170179 A1 Jul. 4, 2013

(30) **Foreign Application Priority Data**

Nov. 18, 2010 (JP) 2010-257923
Nov. 18, 2010 (JP) 2010-257924
Nov. 30, 2010 (JP) 2010-265972

(51) **Int. Cl.**
F21V 9/16 (2006.01)
F21V 13/02 (2006.01)
(Continued)

(52) **U.S. Cl.**
CPC ***F21V 13/02*** (2013.01); ***C03C 14/006*** (2013.01); ***C09K 11/02*** (2013.01); ***C09K 11/625*** (2013.01);
(Continued)

(58) **Field of Classification Search**
CPC ... H01L 33/505; H01L 33/507; H01L 27/322; F21V 9/00–9/16; F21V 2200/30; F21K 9/56
See application file for complete search history.

(56) **References Cited**

U.S. PATENT DOCUMENTS

3,041,228 A * 6/1962 MacLeod G21K 4/00 250/486.1
5,109,463 A * 4/1992 Lee G02B 6/4298 385/123
(Continued)

FOREIGN PATENT DOCUMENTS

CN 1938396 A 3/2007
CN 101523625 A 9/2009
(Continued)

OTHER PUBLICATIONS

English Machine translation JP2008227042A dated Mar. 6, 2015.*
(Continued)

Primary Examiner — Mariceli Santiago
(74) *Attorney, Agent, or Firm* — Keating and Bennett, LLP

(57) **ABSTRACT**

A light source using a wavelength conversion member is increased in brightness. A wavelength conversion element **11** includes a plurality of wavelength conversion members **12** bundled together, each containing a dispersion medium and phosphor powder dispersed in the dispersion medium.
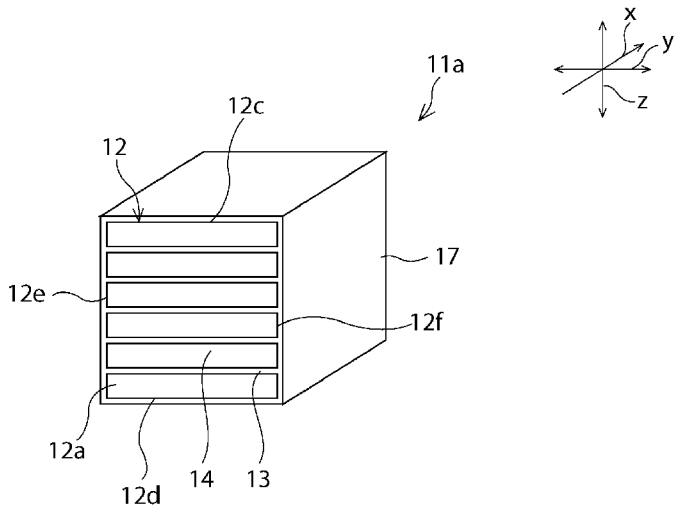
13 Claims, 7 Drawing Sheets