(No Model.)

A. G. BELL & S. TAINTER.

Photophone Transmitter.

No. 235,496. **Patented Dec. 14, 1880.**

Fig. 1.

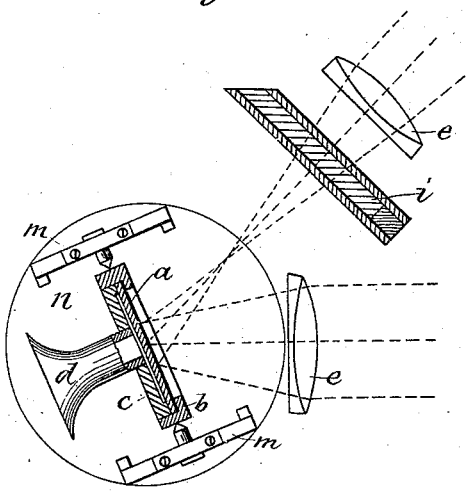

Fig. 2.

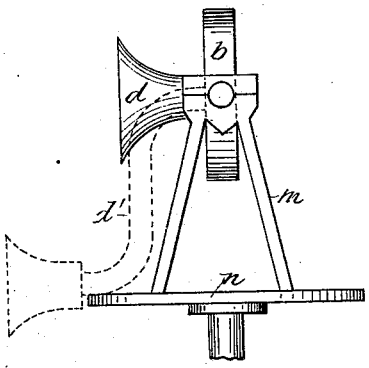

Fig. 3

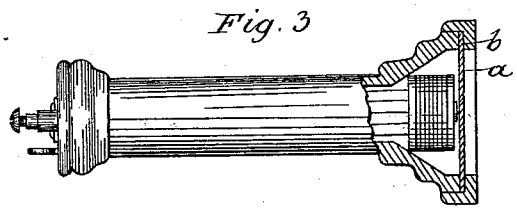

Witnesses:
E. E. Masson
Philip Mauro.

Inventors:
Alexander Graham Bell
and Sumner Tainter
by A. Pollok
their Attorney

N. PETERS, PHOTO-LITHOGRAPHER, WASHINGTON, D. C.