Feb. 15, 1966 L. M. KING ET AL 3,234,996

SOUND RETARDING FOLDING PARTITION

Filed Aug. 26, 1963 3 Sheets-Sheet 1

Fig. 1

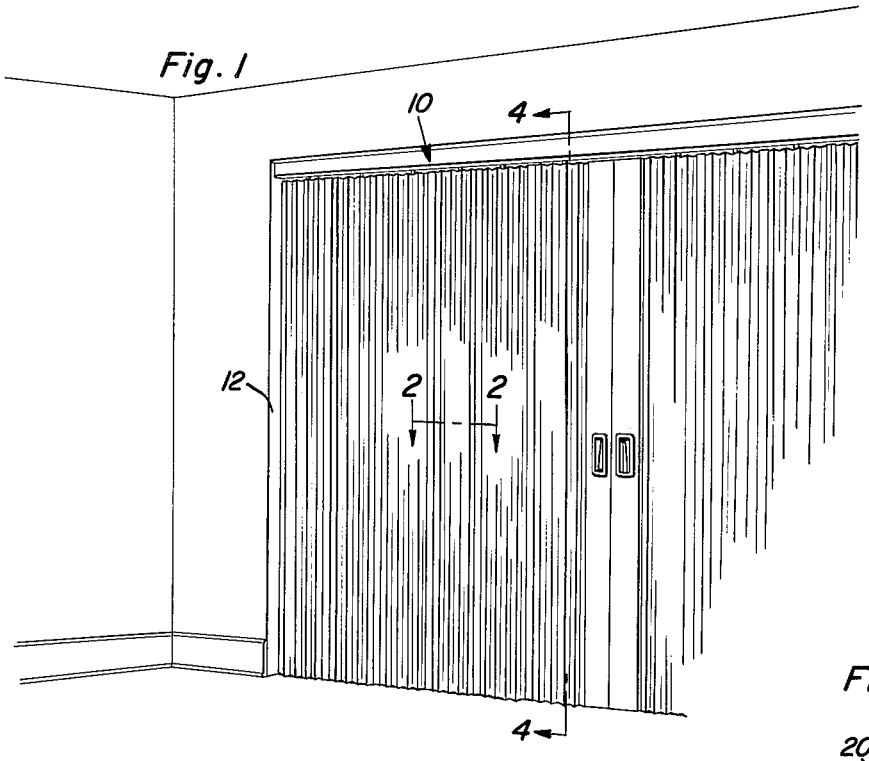

Fig. 7

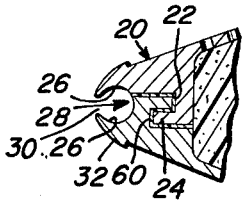

Fig. 2

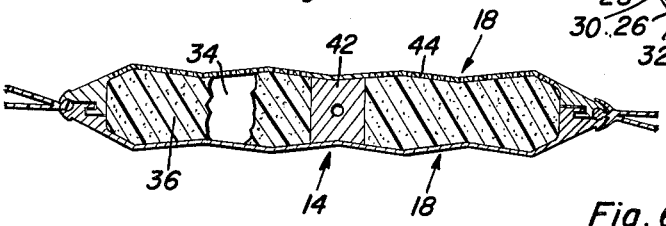

Fig. 3

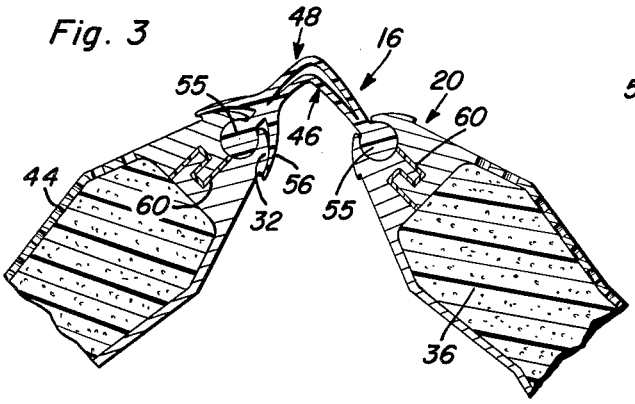

Fig. 6

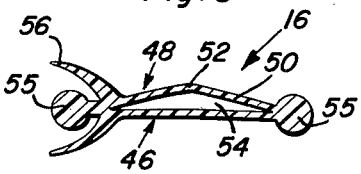

Lewis M. King
Jay A. Smart
INVENTORS

BY Clarence A. O'Brien and Harvey B. Jacobson
Attorneys