US007532196B2

(12) **United States Patent**
**Hinckley**

(10) **Patent No.: US 7,532,196 B2**
(45) **Date of Patent: May 12, 2009**

(54) **DISTRIBUTED SENSING TECHNIQUES FOR MOBILE DEVICES**

(75) Inventor: **Kenneth P. Hinckley**, Redmond, WA (US)

(73) Assignee: **Microsoft Corporation**, Redmond, WA (US)

( * ) Notice: Subject to any disclaimer, the term of this patent is extended or adjusted under 35 U.S.C. 154(b) by 1029 days.

(21) Appl. No.: **10/697,056**

(22) Filed: **Oct. 30, 2003**

(65) **Prior Publication Data**

US 2005/0093868 A1 May 5, 2005

(51) **Int. Cl.**
***G09G 5/00*** (2006.01)

(52) **U.S. Cl.** ..... **345/156**

(58) **Field of Classification Search** ..... 345/156–158, 345/173–179; 382/187–189; 178/18.01, 178/18.03–18.06
See application file for complete search history.

(56) **References Cited**

U.S. PATENT DOCUMENTS

| | | | | |
|---|---|---|---|---|
| 5,812,865 | A | 9/1998 | Theimer et al. | |
| 6,157,935 | A * | 12/2000 | Tran et al. | 715/202 |
| 6,545,669 | B1 * | 4/2003 | Kinawi et al. | 345/173 |
| 6,599,130 | B2 * | 7/2003 | Moehrle | 434/365 |
| 7,006,881 | B1 | 2/2006 | Hoffberg et al. | |
| 7,200,559 | B2 * | 4/2007 | Wang | 704/257 |
| 2002/0116205 | A1 | 8/2002 | Ankireddipally et al. | |
| 2002/0184373 | A1 | 12/2002 | Maes | |
| 2003/0105812 | A1 | 6/2003 | Flowers, Jr. et al. | |
| 2003/0145094 | A1 | 7/2003 | Staamann et al. | |
| 2003/0222917 | A1 * | 12/2003 | Trantow | 345/778 |
| 2005/0030255 | A1 * | 2/2005 | Chiu et al. | 345/1.3 |

OTHER PUBLICATIONS

Rekimoto et al., J., "SyncTap: An Interaction Technique for Mobile Networking", *New Generation of IP-Phone Enabled Mobile Devices*, Mobile HCI 2002, pp. 319-323, 2002.

Hinckley et al., K., "Stitching: Pen Gestures that Span Multiple Displays", http://patrickbaudisch.com/publications/2004-Hinckley-AV104-Stitching.pdf, Oct. 6, 2003.

Hinckley, K., "Bumping Object Together as a Semantically Rich Way Forming Connections between Ubiquitous Devices", UbiComp 2003 conference, Oct. 12, 2003.

Hinckley, K., "Synchronous Gestures for Multiple Persons and Computer", Proceedings of the 16th Annual ACM Symposium on User Interface Software and Technology, Vancouver, Canada, pp. 149-158, Nov. 2-5, 2003.

(Continued)

*Primary Examiner*—Regina Liang
*Assistant Examiner*—Shaheda A Abdin
(74) *Attorney, Agent, or Firm*—John D. Veldhuis-Kroeze; Westman, Champlin & Kelly, P.A.

(57) **ABSTRACT**

Methods and apparatus of the invention allow the coordination of resources of mobile computing devices to jointly execute tasks. In the method, a first gesture input is received at a first mobile computing device. A second gesture input is received at a second mobile computing device. In response, a determination is made as to whether the first and second gesture inputs form one of a plurality of different synchronous gesture types. If it is determined that the first and second gesture inputs form the one of the plurality of different synchronous gesture types, then resources of the first and second mobile computing devices are combined to jointly execute a particular task associated with the one of the plurality of different synchronous gesture types.
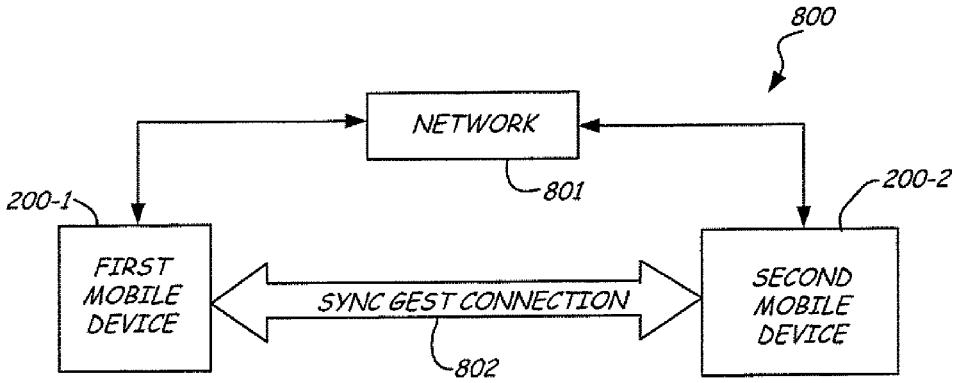
**28 Claims, 21 Drawing Sheets**