Sept. 5, 1933. R. M. HUNTER 1,925,096

GLASS MOLD
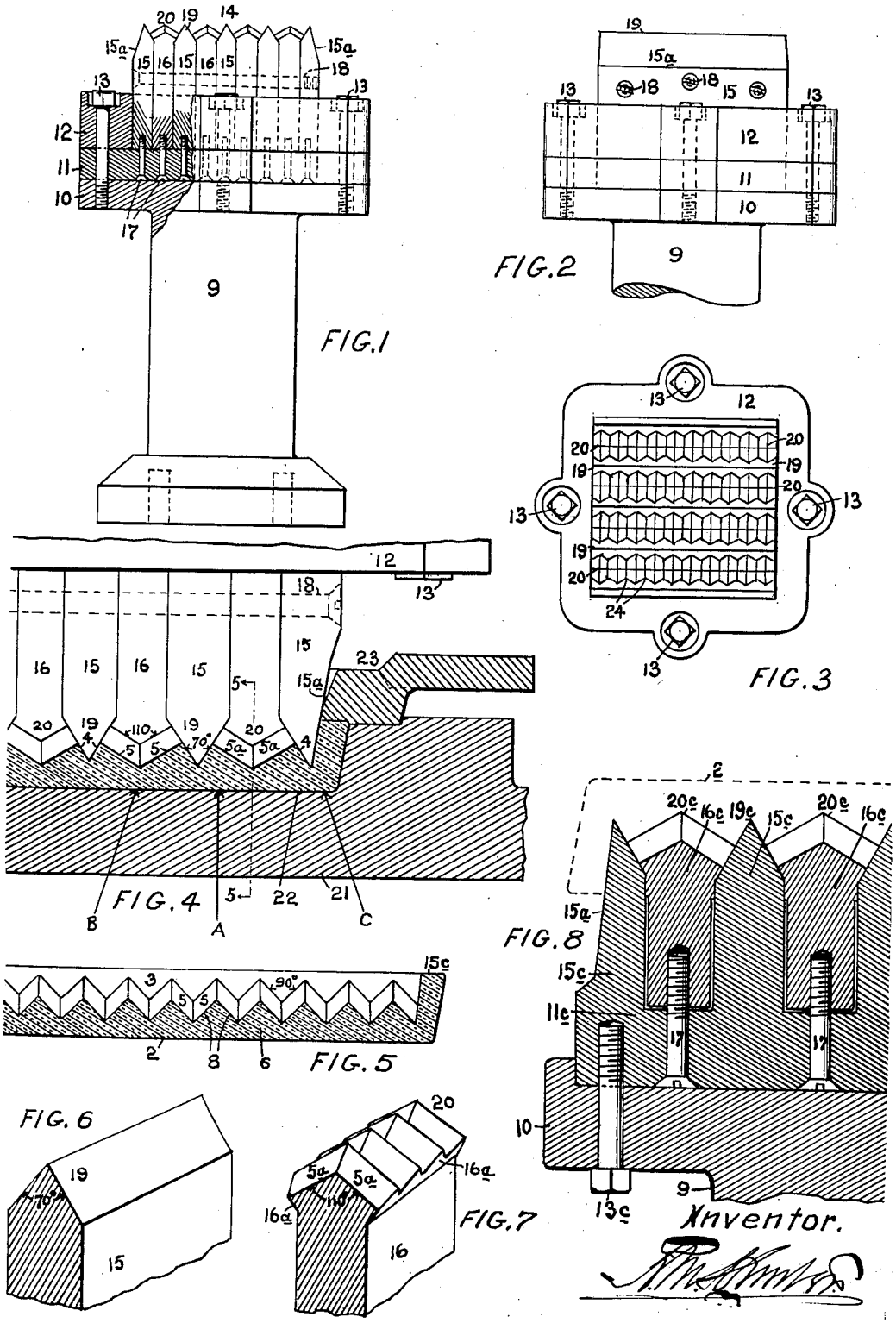
Filed Aug. 14, 1930