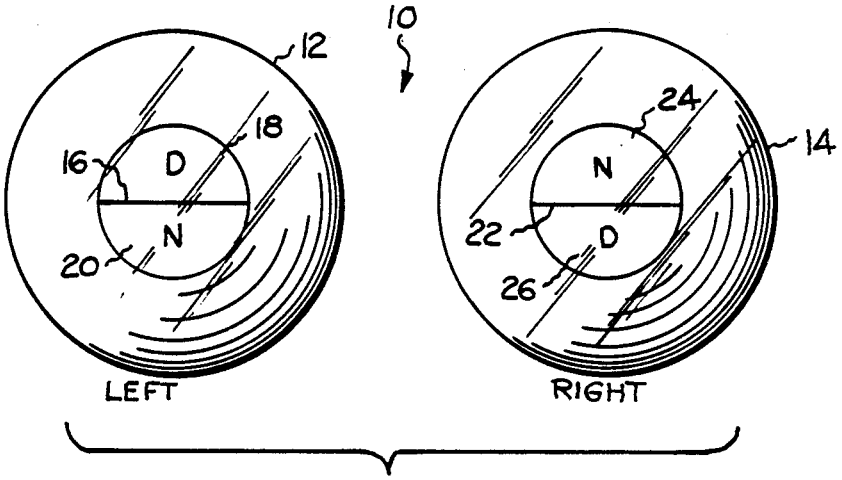
10
12
14
16
18
20
22
24
26
D
N
N
D
LEFT
RIGHT

Fig. 1

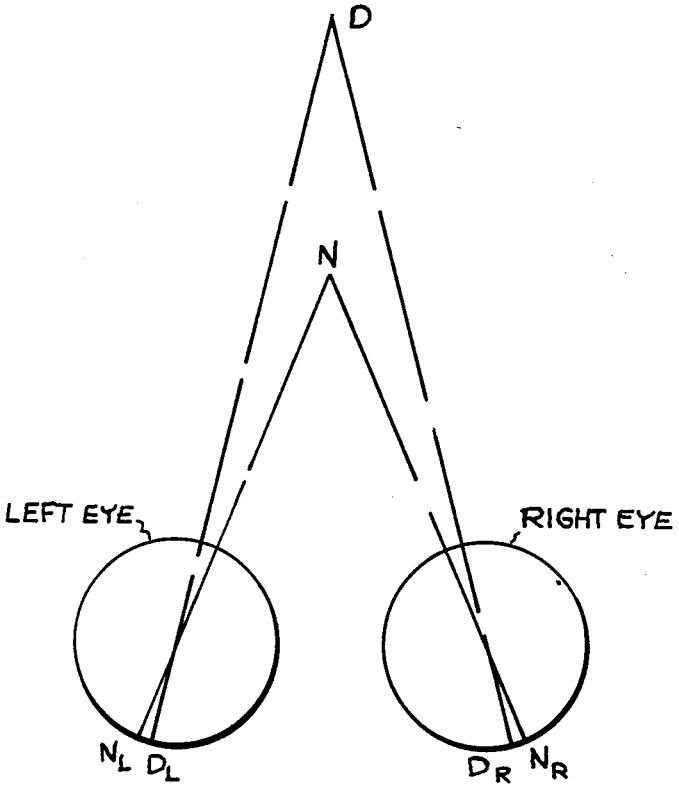
D
N
LEFT EYE
RIGHT EYE
N_L D_L
D_R N_R

Fig. 2