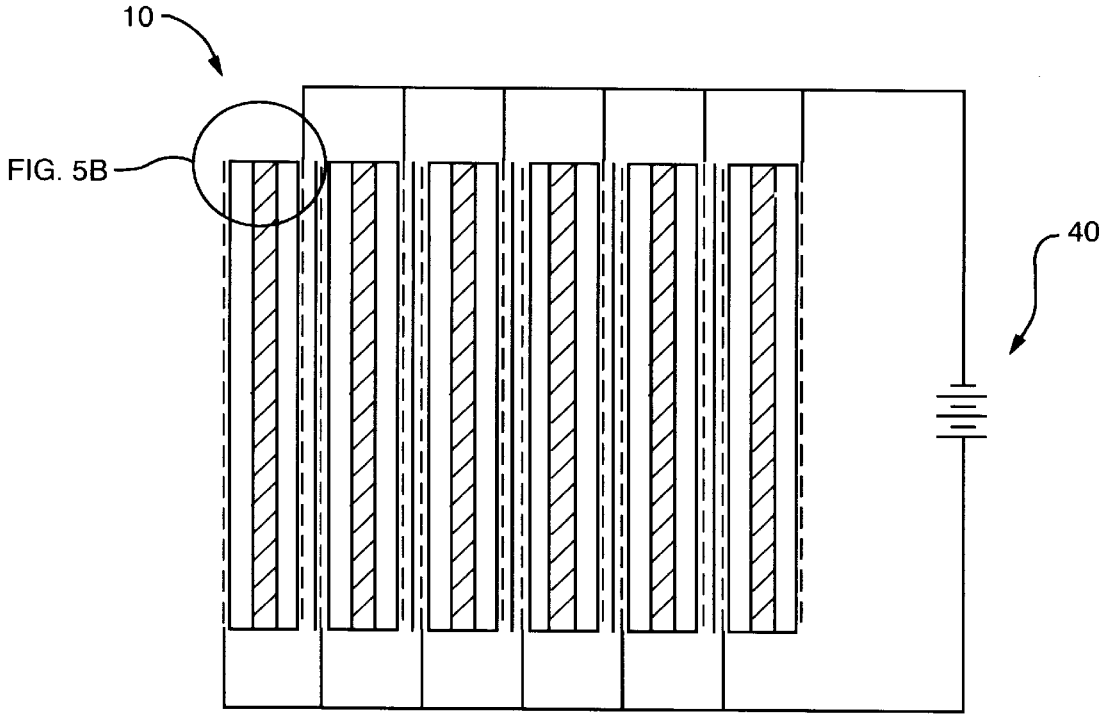

FIG 5A

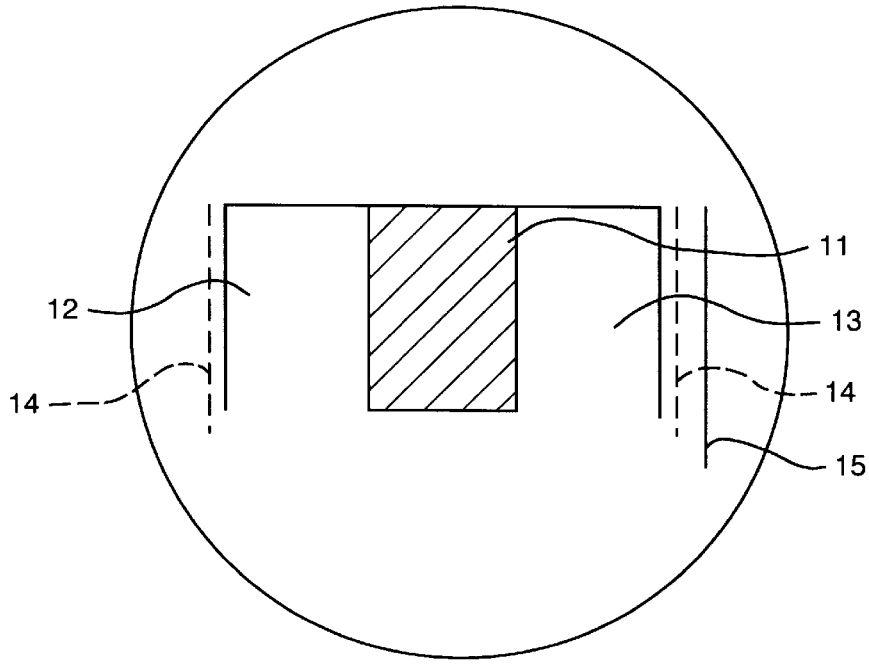

FIG. 5B