United States Patent [19]

Paraskevakos

[11] **3,812,296**

[45] **May 21, 1974**

[54] **APPARATUS FOR GENERATING AND TRANSMITTING DIGITAL INFORMATION**

[75] Inventor: **Theodore G. Paraskevakos,** Athens, Greece

[73] Assignee: **Paraskevakos Electronics & Communication, Inc.,** Wilmington, Del.

[22] Filed: **June 7, 1972**

[21] Appl. No.: **260,511**

Related U.S. Application Data

[63] Continuation of Ser. No. 76,436, Sept. 29, 1970, abandoned.

[30] **Foreign Application Priority Data**

Jan. 26, 1970 Greece 39092

[52] **U.S. Cl.** ..... **179/18 B,** 179/90 B

[51] **Int. Cl.** **H04m 3/42**

[58] **Field of Search**..... 179/18 B, 18 BA, 18 BB, 179/90 B, 90 BB, 90 BD, 90 R

[56] **References Cited**

UNITED STATES PATENTS

3,206,554	9/1965	Kandel et al.	179/18 ET
3,441,685	4/1969	Wallace, Jr.	179/90 B
3,668,330	6/1972	Hemdal	179/18 ES
3,436,477	4/1969	Ghiringhelli	178/26
3,702,902	11/1972	Willis	179/5 R

Primary Examiner—Thomas W. Brown

Attorney, Agent, or Firm—Cushman, Darby & Cushman

[57] **ABSTRACT**

An apparatus for serially generating groups of electrical pulses, each group representing the value of a particular digit or ordinal place of a predetermined number such as the number of a calling telephone together with control digits and added information carrying digits for display or recording at a called telephone site. A number pulse generator repetitively and simultaneously produces a plurality of output pulse trains, each train representing one possible value of a digit. A priority determining unit also generates ordinal place signals sequentially representing a time for transmitting each sequential digit of the predetermined number and selected ones of the groups of electrical pulses are sequentially gated by the ordinal place signals to result in the desired serial transmission of groups of pulses respectively representing the predetermined number whenever such transmission is desired such as in response to a busy signal from the called telephone.
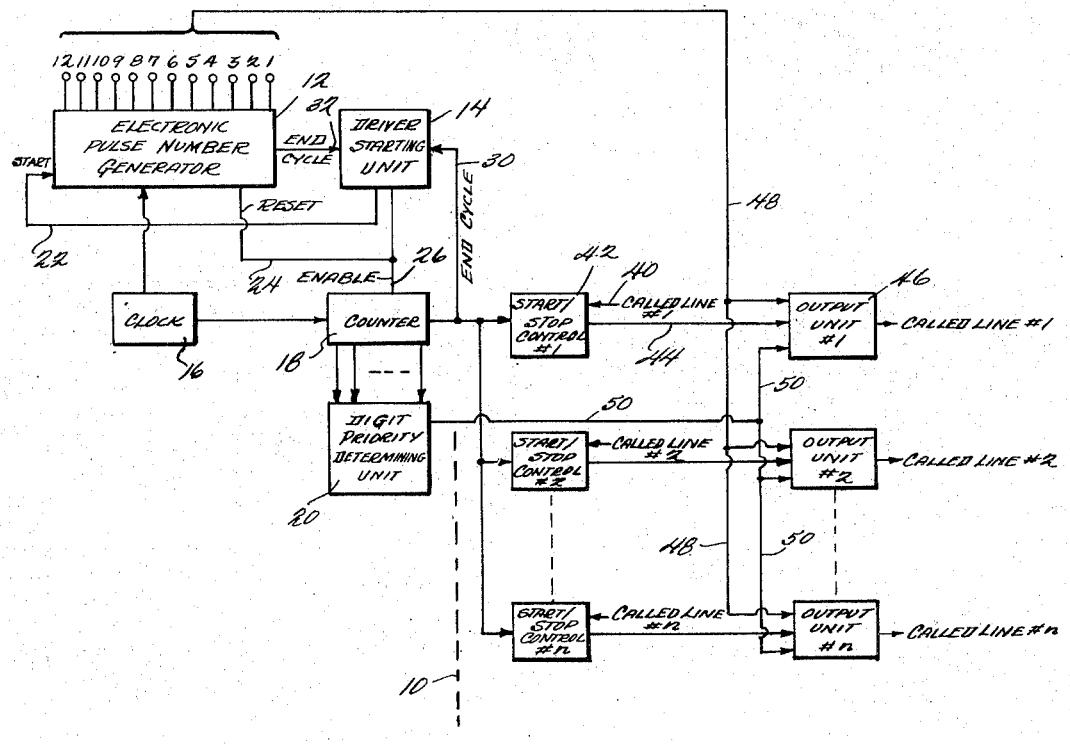
20 Claims, 9 Drawing Figures