US009510496B2

(12) **United States Patent**
Kovach et al.

(10) **Patent No.: US 9,510,496 B2**
(45) **Date of Patent: Dec. 6, 2016**

(54) **TILLAGE IMPLEMENT WITH SCRAPER/DEFLECTOR**

(71) Applicant: **CNH Industrial America LLC**, New Holland, PA (US)

(72) Inventors: **Michael G. Kovach**, Morton, IL (US); **Rick L. Gerber**, Roanoke, IL (US); **Eric J. Anderson**, Metamora, IL (US)

(73) Assignee: **CNH Industrial America LLC**, New Holland, PA (US)

(*) Notice: Subject to any disclaimer, the term of this patent is extended or adjusted under 35 U.S.C. 154(b) by 0 days.

(21) Appl. No.: **14/463,761**

(22) Filed: **Aug. 20, 2014**

(65) **Prior Publication Data**

US 2015/0053441 A1 Feb. 26, 2015

Related U.S. Application Data

(60) Provisional application No. 61/868,285, filed on Aug. 21, 2013.

(51) **Int. Cl.**
A01B 23/06 (2006.01)
A01B 21/08 (2006.01)

(52) **U.S. Cl.**
CPC ***A01B 23/06*** (2013.01); ***A01B 21/083*** (2013.01)

(58) **Field of Classification Search**
CPC A01B 23/06; A01B 15/16
See application file for complete search history.

(56) **References Cited**

U.S. PATENT DOCUMENTS

3,759,332 A 9/1973 Robertson, Sr.
4,127,179 A 11/1978 Heersink et al.
4,211,284 A 7/1980 Collado
4,330,041 A 5/1982 Ankenman
4,423,789 A 1/1984 Anderson et al.
4,492,272 A 1/1985 Jensen
4,687,065 A 8/1987 Cope et al.
4,724,910 A * 2/1988 Wheeler 172/464
6,223,832 B1 5/2001 Hook et al.
6,237,696 B1 5/2001 Mayerle
6,874,584 B2 4/2005 Butterfield et al.
7,290,620 B2 11/2007 Cooper et al.
7,357,193 B2 4/2008 Harmon et al.
7,481,279 B2 1/2009 Blunier et al.
7,568,438 B2 8/2009 Arksey
(Continued)

FOREIGN PATENT DOCUMENTS

SU 1521302 A1 11/1989

OTHER PUBLICATIONS

"Tillage Equipment", Farm King brochure, Apr. 29, 2012 (28 pages).

(Continued)

Primary Examiner — Matthew D Troutman
(74) *Attorney, Agent, or Firm* — Rebecca L. Henkel

(57) **ABSTRACT**

An agricultural tillage implement including a carriage frame assembly and pull hitch towed by a tractor and secondary frames supported by the carriage frame assembly. The secondary frames mount gangs of disk blades for tilling the soil in a travel direction. Bearing hanger assemblies support the gangs of disk blades below the secondary frames and deflector/scraper elements are mounted on the bearing hanger assemblies for scraping soil and residue from the disk blades and deflecting it away from the travel direction.
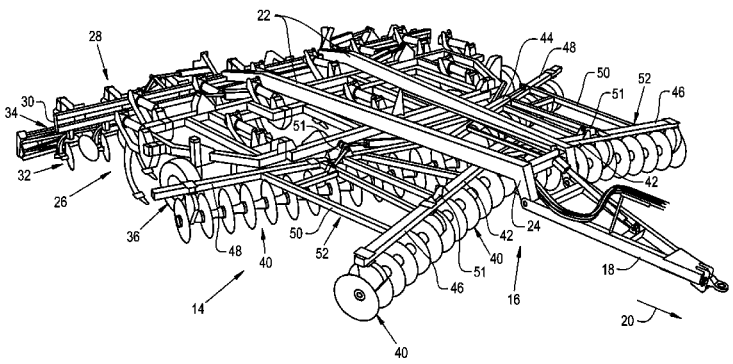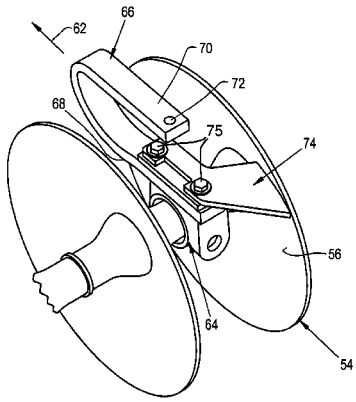
5 Claims, 4 Drawing Sheets