US009410296B2

(12) **United States Patent**
Tabibnia

(10) **Patent No.: US 9,410,296 B2**
(45) **Date of Patent: Aug. 9, 2016**

(54) **APPARATUS AND RELATED METHODS OF PAVING A SUBSURFACE**

(71) Applicant: **Ramin Tabibnia**, Los Angeles, CA (US)

(72) Inventor: **Ramin Tabibnia**, Los Angeles, CA (US)

(*) Notice: Subject to any disclaimer, the term of this patent is extended or adjusted under 35 U.S.C. 154(b) by 0 days.

(21) Appl. No.: **14/657,977**

(22) Filed: **Mar. 13, 2015**

(65) **Prior Publication Data**

US 2015/0184398 A1 Jul. 2, 2015

Related U.S. Application Data

(63) Continuation of application No. 14/253,818, filed on Apr. 15, 2014, now Pat. No. 9,284,693, which is a continuation-in-part of application No. 13/564,628, filed on Aug. 1, 2012, now Pat. No. 8,850,753, which is a continuation-in-part of application No. 12/732,755, filed on Mar. 26, 2010, now Pat. No. 8,453,391.

(51) **Int. Cl.**

E04C 5/00	(2006.01)
E04F 15/024	(2006.01)
E01C 5/00	(2006.01)
E04C 1/39	(2006.01)

(Continued)

(52) **U.S. Cl.**

CPC ... ***E01C 5/00*** (2013.01); ***E04B 5/48*** (2013.01); ***E04C 1/392*** (2013.01); ***E04D 11/007*** (2013.01); ***E04F 15/0247*** (2013.01); ***E04F 15/02447*** (2013.01); ***E04F 15/02452*** (2013.01); ***E04F 15/02464*** (2013.01); ***E04F 15/02482*** (2013.01); ***F24D 3/122*** (2013.01); ***F24D 3/127*** (2013.01); ***F24D 3/142*** (2013.01)

(58) **Field of Classification Search**

CPC E04F 15/024; E04F 15/02464; E04F 15/0247; E04F 15/02183; E04F 15/02452; E04F 15/02476; E04F 15/02482; E04F 2015/02127; E04D 11/00; E04D 11/07; E04D 11/005; E04D 11/007; F16L 47/14; F16L 47/16; F16L 23/024

USPC ..... 52/126.5, 126.6, 263, 704, 705, 708, 52/298; 248/188.2, 188.4, 188.8, 677; 108/150; 114/363; 285/388, 414; 138/96 T, 109; 297/451.5

See application file for complete search history.

(56) **References Cited**

U.S. PATENT DOCUMENTS

223,835	A *	1/1880	Boyle	285/336
1,265,516	A *	5/1918	Beck	108/166

(Continued)

FOREIGN PATENT DOCUMENTS

FR	2559529	A1 *	8/1985	E04D 11/00
FR	2598779	A1 *	11/1987	E04D 11/00
GB	2427416	A *	12/2006	

Primary Examiner — Robert Canfield

(74) *Attorney, Agent, or Firm* — Cislo & Thomas, LLP

(57) **ABSTRACT**

Disclosed may be an intermediate surface for supporting a small paver, wherein the surface can also be used to exchange heat with the pavers. In one embodiment, the apparatus may be a hextray defined by a frame with a hexagonal lattice for supporting pavers. The hextray preferably features a tubing track throughout the lattice to accommodate heat exchange tubing. In operation the hextray may be positioned above a pedestal or directly on a subsurface. In embodiment, the hex tray may be outfitted with insulation and a metal plate so that heat may be exchanged with pedestals via fluid passing through tubing installed throughout the hexagonal lattice. In a preferred embodiment, the hextray features a slot in its corners for receiving a locking disk or locking slider.
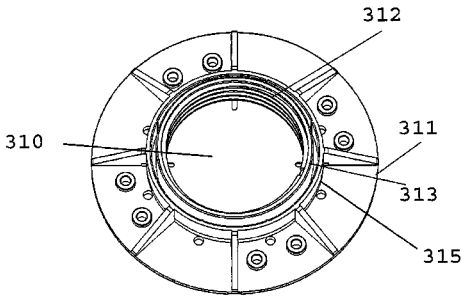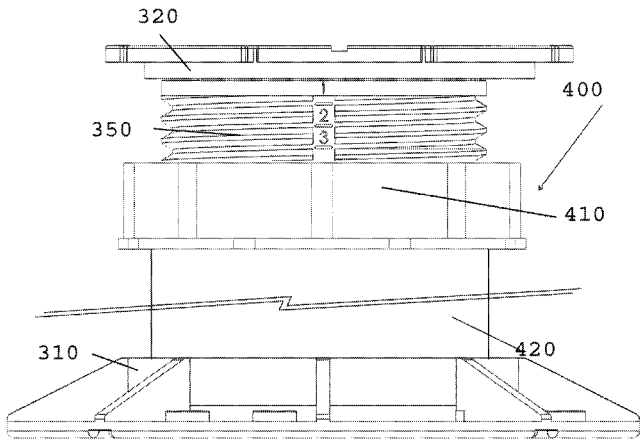
22 Claims, 84 Drawing Sheets