US009409796B2

(12) **United States Patent**
Kirk et al.

(10) **Patent No.: US 9,409,796 B2**
(45) **Date of Patent: Aug. 9, 2016**

(54) **GAS FLOTATION TANK**

(71) Applicants: **Todd William Kirk**, Rockyview County, CA (US); **Daniel Clifford Whitney**, Cochrane, CA (US); **Douglas Walker Lee**, Calgary, CA (US)

(72) Inventors: **Todd William Kirk**, Rockyview County, CA (US); **Daniel Clifford Whitney**, Cochrane, CA (US); **Douglas Walker Lee**, Calgary, CA (US)

(73) Assignee: **Exterran Water Solutions ULC**, Calgary, Alberta (CA)

(*) Notice: Subject to any disclaimer, the term of this patent is extended or adjusted under 35 U.S.C. 154(b) by 80 days.

(21) Appl. No.: **13/975,750**

(22) Filed: **Aug. 26, 2013**

(65) **Prior Publication Data**

US 2015/0053600 A1 Feb. 26, 2015

(51) **Int. Cl.**

B03D 1/24	(2006.01)
C02F 1/24	(2006.01)
B03D 1/14	(2006.01)
B03D 1/02	(2006.01)

(52) **U.S. Cl.**

CPC ***C02F 1/24*** (2013.01); ***B03D 1/1406*** (2013.01); ***B03D 1/1412*** (2013.01); ***B03D 1/1462*** (2013.01); ***B03D 1/1493*** (2013.01); ***B03D 1/24*** (2013.01); *B03D 1/028* (2013.01)

(58) **Field of Classification Search**

CPC B03D 1/1406; B03D 1/1493; C02F 1/24
See application file for complete search history.

(56) **References Cited**

U.S. PATENT DOCUMENTS

2,211,565	A *	8/1940	Degenhardt et al.	210/704
3,246,763	A *	4/1966	Baum	210/221.2
3,831,758	A *	8/1974	Watson et al.	210/199
5,766,484	A *	6/1998	Petit et al.	210/703
6,758,972	B2 *	7/2004	Vriens et al.	210/605
7,867,398	B2 *	1/2011	Harmon et al.	210/604
8,080,158	B2	12/2011	Lee et al.	
8,475,663	B2	7/2013	Lee et al.	
2007/0114183	A1 *	5/2007	Lee et al.	210/703
2011/0163040	A1	7/2011	Lee et al.	
2011/0297620	A1 *	12/2011	Lee et al.	210/703

OTHER PUBLICATIONS

PCT—International Search Report and Written Opinion of the International Searching Authority dated Oct. 6, 2014.

* cited by examiner

Primary Examiner — Thomas M Lithgow
(74) *Attorney, Agent, or Firm* — Schiff Hardin LLP

(57) **ABSTRACT**

A gas flotation tank is provided that includes a series of adjacent chambers which impart a rotational current therein. Each chamber is separated from a skim oil trough by a skimming weir. Each chamber comprises an alternating fluid communication device between adjacent chambers allowing fluid communication between adjacent chambers in the form of a communication port in the dividing wall between adjacent chambers and a chamber outlet in conjunction with a perforated plate and the outlet is positioned in fluid communication with the final chamber.
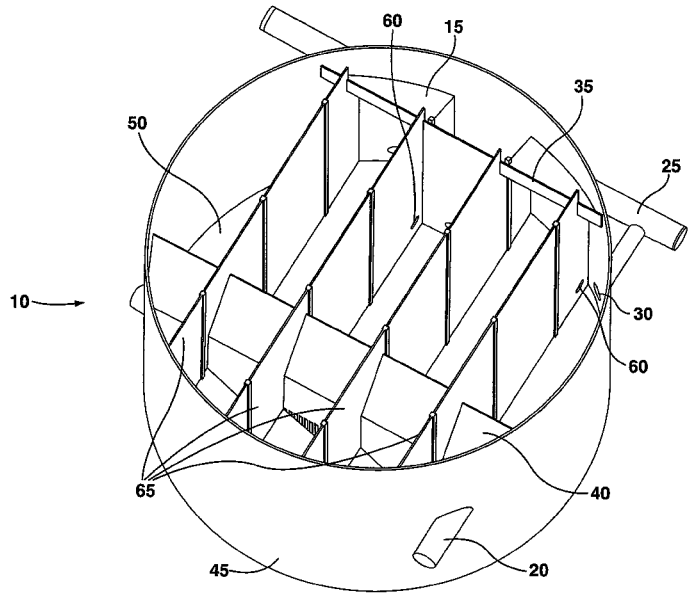
15 Claims, 9 Drawing Sheets