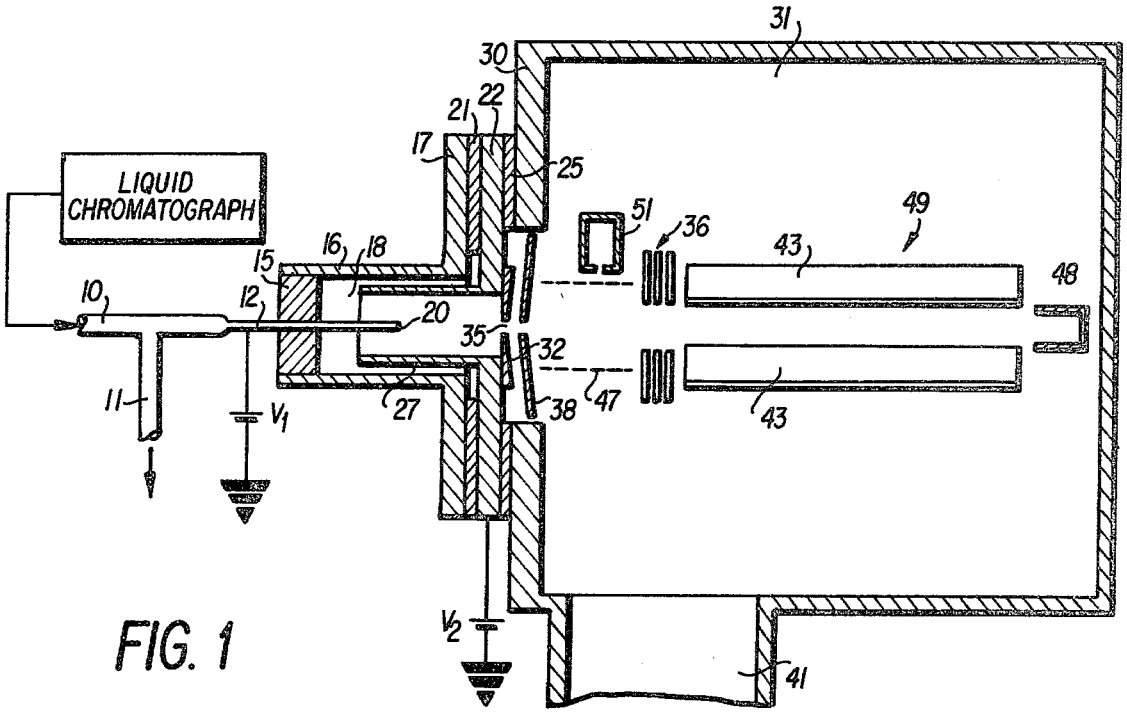
LIQUID CHROMATOGRAPH
10
11
12
15
16
17
18
20
21
22
25
27
30
31
32
35
36
38
41
43
47
48
49
51
V_1
V_2

FIG. 1

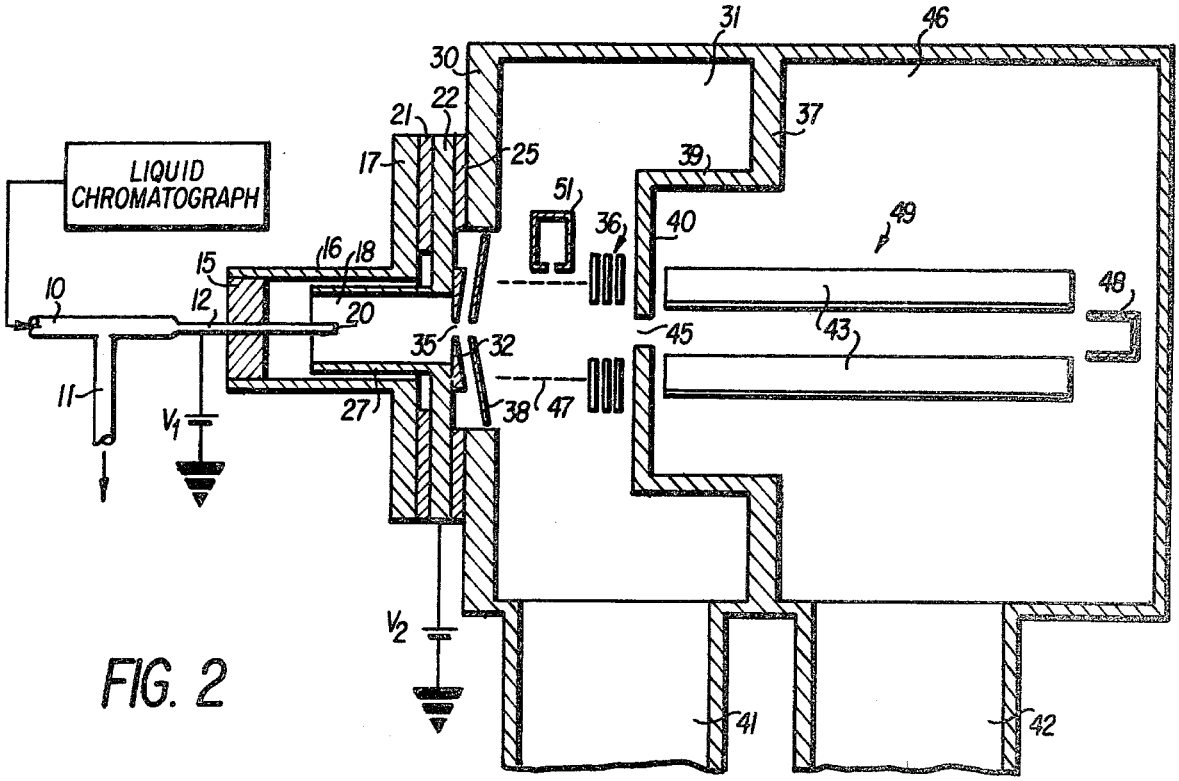
LIQUID CHROMATOGRAPH
10
11
12
15
16
17
18
20
21
22
25
27
30
31
32
35
36
37
38
39
40
41
42
43
45
46
47
48
49
51
V_1
V_2

FIG. 2