US009409096B2

(12) **United States Patent**
Fie, II

(10) **Patent No.: US 9,409,096 B2**
(45) **Date of Patent: Aug. 9, 2016**

(54) **ADJUSTABLE TOE SUSPENSION ARM**

(71) Applicant: **E. Arnold Fie, II**, Denver, NC (US)

(72) Inventor: **E. Arnold Fie, II**, Denver, NC (US)

(73) Assignee: **Custom Works RC Products LLC**, Denver, NC (US)

(*) Notice: Subject to any disclaimer, the term of this patent is extended or adjusted under 35 U.S.C. 154(b) by 0 days.

(21) Appl. No.: **14/022,318**

(22) Filed: **Sep. 10, 2013**

(65) **Prior Publication Data**

US 2015/0069729 A1 Mar. 12, 2015

(51) **Int. Cl.**
A63H 17/26 (2006.01)
B62D 17/00 (2006.01)

(52) **U.S. Cl.**
CPC ***A63H 17/262*** (2013.01); ***B62D 17/00*** (2013.01)

(58) **Field of Classification Search**
CPC A63H 17/262; B62D 17/00; B60G 2200/462; B60G 2200/4622
USPC 280/86.75–86.758, 124.134
See application file for complete search history.

(56) **References Cited**

U.S. PATENT DOCUMENTS

2,732,233	A	*	1/1956	MacMillan et al.	403/181
3,635,304	A	*	1/1972	Hills	B62D 1/24 180/400
4,714,270	A	*	12/1987	Rumpel	280/124.144
4,718,691	A	*	1/1988	Specktor et al.	280/86.75
RE33,179	E	*	3/1990	Pettibone	280/86.753
5,826,894	A	*	10/1998	McDonald et al.	280/86.756
5,941,545	A	*	8/1999	Park	280/86.758
6,047,789	A	*	4/2000	Iwanaga	180/440
6,402,168	B1	*	6/2002	Chino et al.	280/86.758
6,435,527	B1	*	8/2002	Katae	280/86.758
7,111,855	B2	*	9/2006	Winkler et al.	280/86.754
7,334,805	B2	*	2/2008	Nam	280/86.753
8,215,653	B2	*	7/2012	Siebeneick	280/93.512
2005/0067803	A1	*	3/2005	Inayoshi et al.	280/86.75
2014/0091542	A1	*	4/2014	Luttinen et al.	280/86.75

* cited by examiner

Primary Examiner — Laura Freedman
(74) *Attorney, Agent, or Firm* — Ice Miller LLP

(57) **ABSTRACT**

The present embodiments provide an adjustable toe suspension arm for a vehicle. The suspension arm includes a main suspension bracket coupled to the vehicle's chassis. An outer swing bracket is pivotably coupled to the main suspension bracket. An adjustment mechanism is coupled to the main suspension bracket. A sliding nut is coupled to the adjustment mechanism. A portion of the sliding nut is contact with the outer swing bracket. When the adjustment mechanism is manipulated, the sliding nut moves to rotate the outer swing bracket with respect to the main suspension bracket.
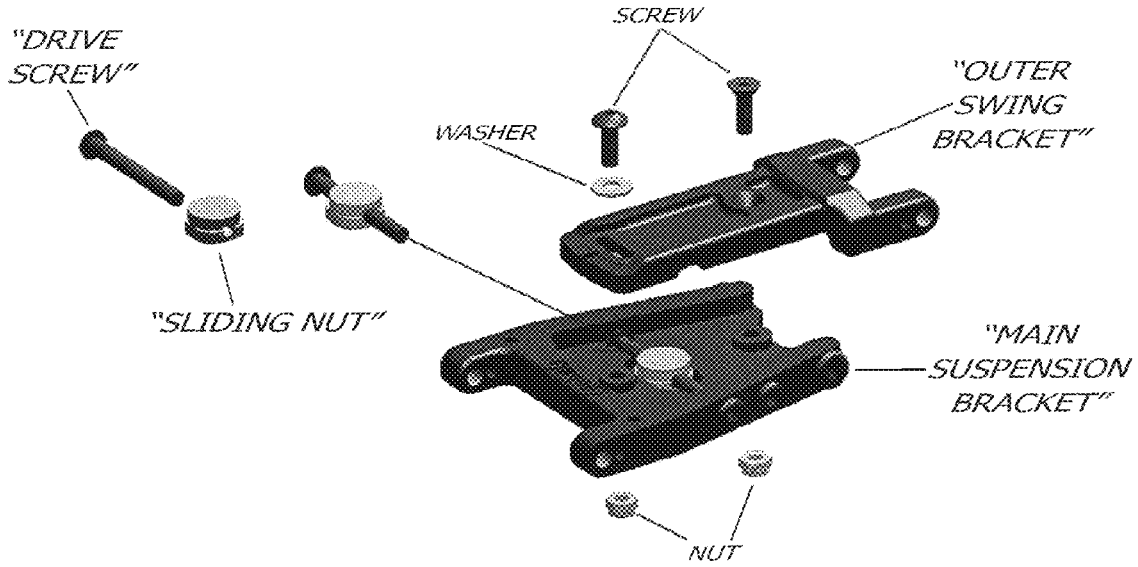
7 Claims, 3 Drawing Sheets