US00D503396S

(12) United States Design Patent

Hisatsune

(10) Patent No.: US D503,396 S

(45) Date of Patent: ** Mar. 29, 2005

(54) **SPEAKER BOX**

(75) Inventor: **Toshiyuki Hisatsune**, Tokyo (JP)

(73) Assignee: **Sony Corporation**, Tokyo (JP)

(**) Term: **14 Years**

(21) Appl. No.: **29/200,857**

(22) Filed: **Mar. 8, 2004**

(51) **LOC (7) Cl.** **14-01**

(52) **U.S. Cl.** **D14/214**

(58) **Field of Search** D14/204, 207, D14/209–216, 356; 181/143–144, 147–148, 150, 157, 198–199, 151, 153; 381/300–302, 306, 333, 345, 361–364, 386–388, 332, 336

(56) **References Cited**

U.S. PATENT DOCUMENTS

D369,356 S	*	4/1996	Olson	D14/214
D372,918 S	*	8/1996	Manganese et al.	D14/214
D418,138 S	*	12/1999	Miyazaki	D14/214
D432,115 S	*	10/2000	Juszkiewicz et al.	D14/204
D475,991 S		6/2003	Hisatsune	
D478,891 S	*	8/2003	Hisatsune	D14/211

OTHER PUBLICATIONS

Web page "Panasonic idea for life, SB–PF500" http://prodb.matsushita.co.jp/product/info.do?pg=04&hb=SB–PF500, 1 sheet, Matsushita Electric Industries Co., Ltd. (Nov. 2003).

Web page"S–VSL3" http://www.pioneer.co.jp/catalog/ht/s–vsl3_spec.php, 1 sheet, Pioneer Corporation (Nov. 2003).

* cited by examiner

Primary Examiner—Nanda Bondade

(74) *Attorney, Agent, or Firm*—Rader, Fishman & Grauer PLLC

(57) **CLAIM**

The ornamental design for a speaker box, as shown.

DESCRIPTION

FIG. **1** is a perspective view of a speaker box showing my new design;

FIG. **2** is a front elevational view thereof;

FIG. **3** is a left side elevational view thereof;

FIG. **4** is a right side elevational view thereof;

FIG. **5** is a rear elevational view thereof;

FIG. **6** is a top plan view thereof; and,

FIG. **7** is a bottom plan view thereof.
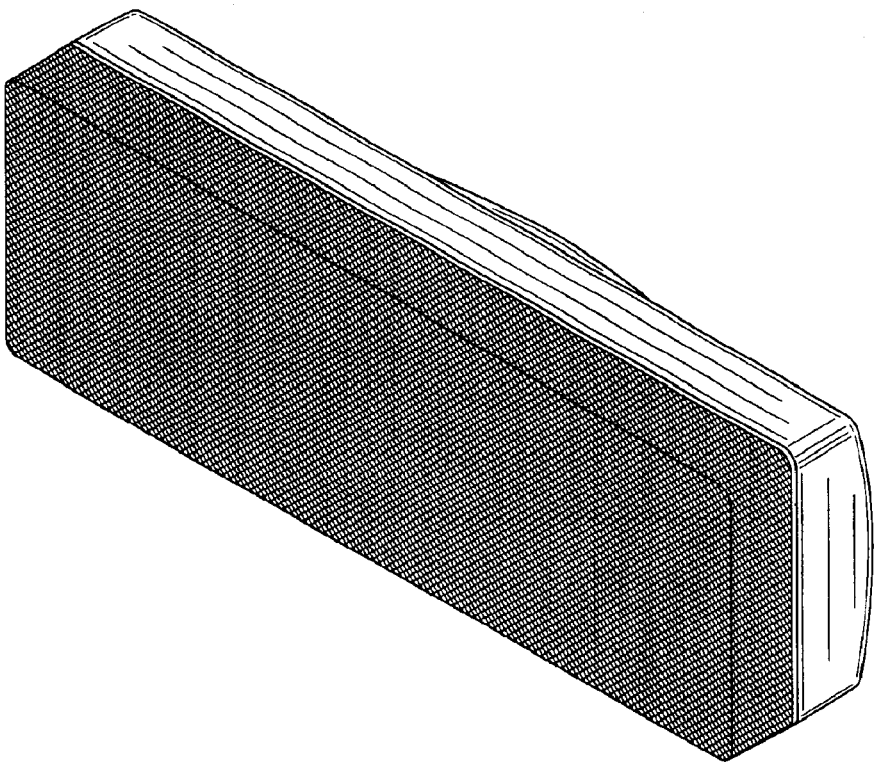
1 Claim, 5 Drawing Sheets