United States Patent [19]

Tomsyck et al.

[11] **Patent Number: 4,501,396**

[45] **Date of Patent: Feb. 26, 1985**

[54] **VIDEO CASSETTE TIME LEFT GAUGE**

[75] Inventors: **John P. Tomsyck**, St. Paul; **Thomas J. Zohn**, Woodbury, both of Minn.

[73] Assignee: **Minnesota Mining and Manufacturing Company**, St. Paul, Minn.

[21] Appl. No.: **500,544**

[22] Filed: **Jun. 2, 1983**

[51] **Int. Cl.**[3] **G03B 1/04**; G11B 15/32

[52] **U.S. Cl.** ..... **242/199**; 206/459; 283/48 R; 283/81; 40/360; 40/611

[58] **Field of Search** ..... 242/197-200, 242/55.19 A; 206/459; 116/295, 302, 308, 334, DIG. 37; 360/93, 132, 137; 40/360, 611; 352/72-78; 283/21, 48 R, 48 A

[56] **References Cited**

U.S. PATENT DOCUMENTS

1,092,184	4/1914	Stevens	283/48 R
2,832,138	4/1958	Sullenberger	33/1
2,937,818	5/1960	Zorn	242/55.13
3,414,269	12/1968	Appel	242/199 X
3,565,367	2/1971	Yamamoto	242/199
3,630,170	12/1971	Christo	360/132 X
3,718,290	2/1973	Wright	242/199
3,810,246	5/1974	Stone, Jr. et al.	242/199
3,912,194	10/1975	Chan	242/199
3,913,200	10/1975	Kossor	360/137 X
4,059,912	11/1977	Noah	40/2 R
4,135,316	1/1979	Saito	242/199 X
4,204,706	5/1980	Blum et al.	283/21
4,217,614	8/1980	Balson	360/132

FOREIGN PATENT DOCUMENTS

2709142	9/1978	Fed. Rep. of Germany	242/199
2709987	9/1978	Fed. Rep. of Germany	242/199
3140137	5/1983	Fed. Rep. of Germany	283/48 A
1046547	12/1953	France	242/199

Primary Examiner—Leonard D. Christian

Attorney, Agent, or Firm—Donald M. Sell; James A. Smith; William B. Barte

[57] **ABSTRACT**

A time-remaining gauge for use with video cassettes is provided, wherein the gauge includes a substrate having a pressure sensitive adhesive on one side and various indicia on the other side which may be aligned with the radius of tape on a supply or take-up spool on the cassette and viewed through a window in the cassette on which the gauge is affixed.
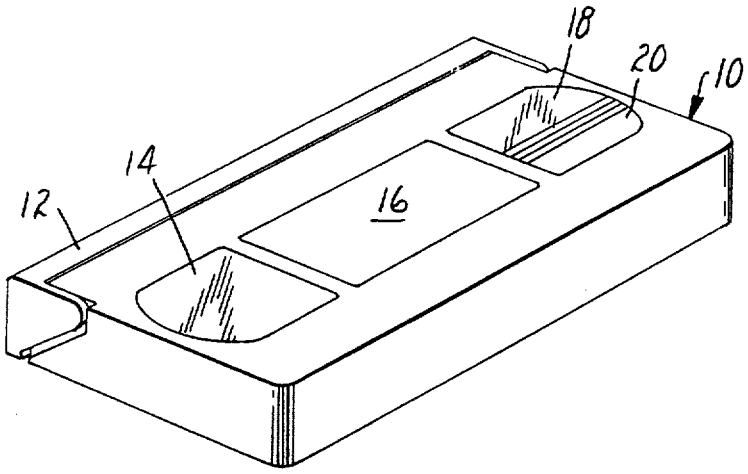
3 Claims, 8 Drawing Figures