US006699295B2

(12) **United States Patent**
Lee et al.

(10) **Patent No.: US 6,699,295 B2**
(45) **Date of Patent: Mar. 2, 2004**

(54) **MULTI-AXIS PROSTHETIC ANKLE JOINT**

(75) Inventors: **Chi L. Lee**, Columbus, OH (US); **James M. Colvin**, Hilliard, OH (US); **Robert E. Arbogast**, Mt. Sterling, OH (US)

(73) Assignee: **Ohio Willow Wood Company**, Mount Sterling, OH (US)

(*) Notice: Subject to any disclaimer, the term of this patent is extended or adjusted under 35 U.S.C. 154(b) by 0 days.

(21) Appl. No.: **09/893,887**

(22) Filed: **Jun. 29, 2001**

(65) **Prior Publication Data**

US 2003/0004582 A1 Jan. 2, 2003

(51) **Int. Cl.**[7] **A61F 2/66**
(52) **U.S. Cl.** **623/49**; 623/52
(58) **Field of Search** 623/47–50, 53, 623/52, 54–55

(56) **References Cited**

U.S. PATENT DOCUMENTS

1,001,641	A	*	8/1911	Harrison	623/47
1,090,327	A	*	3/1914	Milligan	623/47
1,400,042	A	*	12/1921	Erb	623/47
2,066,599	A	*	1/1937	Willett	623/47
2,215,525	A	*	9/1940	Jeter	623/47
2,390,920	A	*	12/1945	Caron	623/47
2,620,485	A	*	12/1952	Greissinger	623/47
2,692,990	A	*	11/1954	Schaefer	623/47
2,731,645	A	*	1/1956	Woodall	623/50
3,956,775	A	*	5/1976	Moore	623/47
3,982,280	A		9/1976	Asbelle et al.	
4,446,580	A	*	5/1984	Furuya et al.	623/50
4,461,045	A		7/1984	Shorter et al.	
4,463,459	A		8/1984	Shorter et al.	
4,645,508	A		2/1987	Shorter et al.	
4,792,340	A		12/1988	Aulie et al.	
5,019,109	A		5/1991	Voisin	
5,112,356	A		5/1992	Harris et al.	
5,116,383	A		5/1992	Shorter et al.	
5,376,139	A		12/1994	Pitkin	
5,458,656	A	*	10/1995	Phillips	623/47
5,766,264	A		6/1998	Lundt	
5,800,563	A	*	9/1998	Arbogast et al.	623/35
5,800,568	A		9/1998	Atkinson et al.	
5,899,944	A	*	5/1999	Phillips	623/55
5,957,981	A	*	9/1999	Gramnas	623/47
5,993,488	A	*	11/1999	Phillips	623/55
6,120,547	A	*	9/2000	Christensen	623/52
6,290,730	B1	*	9/2001	Pitkin et al.	623/49

FOREIGN PATENT DOCUMENTS

GB	403 337	12/1933

* cited by examiner

Primary Examiner—Corrine McDermott
Assistant Examiner—Alvin Stewart
(74) *Attorney, Agent, or Firm*—Oblon, Spivak, McClelland, Maier & Neustadt, P.C.

(57) **ABSTRACT**

A multi-axis prosthetic ankle includes a bottom component connected to a prosthetic foot, a lower leg connection component connected to a prosthetic lower leg, an elastomeric material securely connecting the bottom component with the lower leg connection component, and a mechanical device suspended in the elastomeric material. The mechanical device is formed of a first bracket connected to the bottom component and a second bracket connected to the lower leg connection component. The first and second brackets interlockingly float in the elastomeric material, and are not in direct contact with one another, thereby permitting relative movement of the bottom component and the lower leg connection component by deformation of the elastomeric material. At least one mechanical stop is positioned to prevent the relative angular movement of the ankle from deforming the elastomeric material beyond the elastic limit thereof.
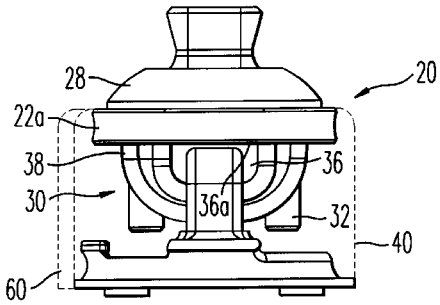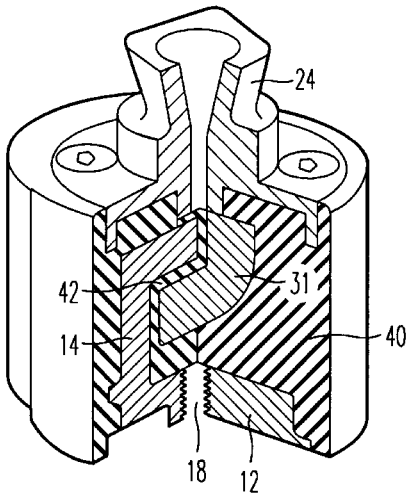
24 Claims, 4 Drawing Sheets