US006091195A

United States Patent [19]

Forrest et al.

[11] **Patent Number: 6,091,195**

[45] **Date of Patent: *Jul. 18, 2000**

[54] **DISPLAYS HAVING MESA PIXEL CONFIGURATION**

[75] Inventors: **Stephen R. Forrest**; **Paul Burrows**; **Dmitri Z. Garbuzov**, all of Princeton, N.J.

[73] Assignee: **The Trustees of Princeton University**, Princeton, N.J.

[*] Notice: This patent is subject to a terminal disclaimer.

[21] Appl. No.: **08/794,595**

[22] Filed: **Feb. 3, 1997**

[51] **Int. Cl.**[7] **H05B 33/14**

[52] **U.S. Cl.** **313/504**; 313/506; 313/509

[58] **Field of Search** 313/498, 503, 313/504, 506, 509; 315/169.1, 169.3

[56] **References Cited**

U.S. PATENT DOCUMENTS

4,769,292	9/1988	Tang et al.	313/504
5,294,870	3/1994	Tang et al.	313/504
5,663,573	9/1997	Epstein et al.	313/504
5,674,597	10/1997	Fuji et al.	313/504
5,701,055	12/1997	Nagayama et al.	313/504
5,707,745	1/1998	Forrest et al.	428/432
5,742,129	4/1998	Nagayama et al.	313/498
5,834,893	11/1998	Bulovic et al.	313/506

FOREIGN PATENT DOCUMENTS

WO 96/19792 6/1996 WIPO .

OTHER PUBLICATIONS

S. W. Depp and W. E. Howard, "Flat Panel Displays," *Scientific American* 90 (Mar. 1993). pp. 90–97.

D. Z. Garbuzov et al., "Photoluminescence Efficiency and Absorption of Aluminum Tri–Quinolate (Alq_3) Thin Films," 249 *Chemical Physics Letters* (1996). pp. 433–437.

C. E. Johnson et al., "Luminescent Iridium (I), Rhodium (I), and Platinum (II) Dithiolate Complexes," 105 *Journal of the American Chemical Society* (1983). (No month) pp. 1795–1802.

Hosokawa et al., "Highly efficient blue electroluminescence from a distrrylarylene emitting layer with a new dopant," 67 *Appl. Phys. Lett.* 3853–3855 (Dec. 1995).

Adachi et al., "Blue light–emitting organic electroluminescent devices," 56 *Appl. Phys. Lett.* 799–801 (Feb. 1990).

C. C. Wu et al., "Integrated three–color organic light–emitting devices," 69 *Appl. Phys. Lett.* 3117–3119 (Nov. 1996).

H. Vestweber et al., "Electroluminescense from polymer blends and molecularly doped polymers," 64 *Synthetic Metals* 141–145 (1994). (No month).

Burrows et al., "Color Tunable Organic Light Emitting Devices," 69 *Appl. Phys. Lett.* (Nov. 11, 1996). pp. 2959–2961.

D. Z. Garbuzov et al., "Organic films deposited on Si p–n junctions: Accurate measurements of fluorescence internal efficiency, and application to luminescent antireflection coatings," 80 *J. Appl. Phys.* 4644–4648 (Oct. 1996).

P.E. Burrows et al., "Reliability and degradation of organic light emitting devices," 65 *Appl. Phys. Lett.* 2922–2924 (Dec. 1994).

H. A. MacLeod, *Thin Film Optical Filters,* pp. 94–110 (1969). (No month).

Johnson et al., "Electroluminescence from Single Layer Molecularly doped polymer films," 67 *Pure & Appl. Chem.,* 175–182 (1985). (No month).

Primary Examiner—Michael H. Day
Attorney, Agent, or Firm—Kenyon & Kenyon

[57] **ABSTRACT**

A multicolor organic light emitting display device employs angle-walled blue, green and red emitting mesas, with optional metal reflectors on the angled walls, in a plurality of pixels. The angle-walled mesas, which resemble truncated pyramids, direct light out of the mesa by reflection from the mesa side walls or by mirror reflection. The device of the present invention reduces waveguiding, thus simultaneously increasing both display brightness and resolution.
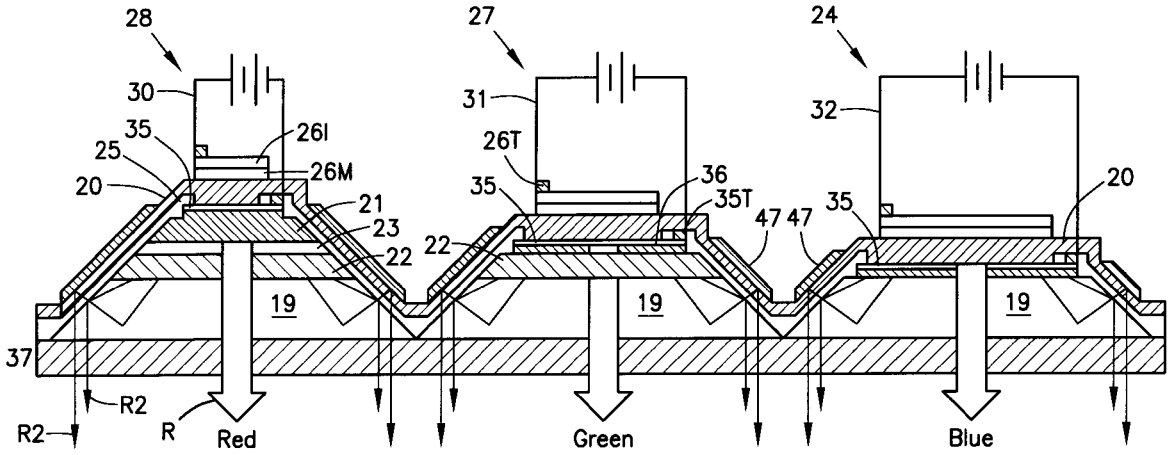
52 Claims, 11 Drawing Sheets