US005368195A

United States Patent [19]

Pleet et al.

[11] Patent Number: 5,368,195

[45] Date of Patent: Nov. 29, 1994

[54] **PRESSURIZED BAG-IN-BOTTLE LIQUID DISPENSING SYSTEM**

[76] Inventors: **Lawrence Pleet**, 9 Flintlock La., Bell Canyon, Calif. 91307; **Richard J. Heminuk**, 3277 Cherie Dr., Simi Valley, Calif. 93063

[21] Appl. No.: **61,194**

[22] Filed: **May 13, 1993**

[51] **Int. Cl.**[5] **B65D 35/28**; G01F 11/00

[52] **U.S. Cl.** **222/52**; 222/95; 222/105; 222/144.5; 222/146.6; 222/219; 222/263; 222/494

[58] **Field of Search** 222/52, 54, 95, 105, 222/183, 217-219, 146.5, 146.1, 146.6, 144.5, 389, 386.5, 256, 257, 258, 262, 263, 148, 571, 494

[56] **References Cited**

U.S. PATENT DOCUMENTS

2,427,680	9/1947	Leonard	222/219 X
2,513,455	7/1950	Cornelius	222/386.5
3,167,398	1/1965	Whittington	222/219 X
3,172,578	3/1965	Kemp	222/219
3,387,748	6/1968	Brenchley	222/219 X
3,394,850	7/1968	Volkober	222/219
3,459,338	8/1969	Lee et al.	222/219
3,871,553	3/1975	Steinberg	222/95
3,895,748	7/1975	Klingenberg	222/571
4,032,044	6/1977	Flynn et al.	222/263 X
4,109,831	8/1978	Culpepper	222/263 X
4,124,147	11/1978	Priese et al.	222/263 X
4,484,697	11/1984	Fry, Jr.	222/386.5 X
4,767,028	8/1988	Rohlfing et al.	222/219
4,796,788	1/1989	Bond	222/386.5 X
4,921,135	5/1990	Pleet	222/95 X
4,927,057	5/1990	Janko et al.	222/52 X
4,957,226	9/1990	Pacia	222/205 X
4,999,124	3/1991	Copeland	222/52 X
5,052,594	10/1991	Sorby	222/571 X
5,251,787	10/1993	Simson	222/389 X

Primary Examiner—Kevin P. Shaver

Attorney, Agent, or Firm—Kelly Bauersfeld & Lowry

[57] **ABSTRACT**

A fluid dispenser system is provided for accurate delivery of a viscous or semi-viscous fluid. The dispenser system includes a pressure station for receiving a bottle filled with the selected fluid substance, and for pressurizing the bottle for fluid flow therefrom. In the preferred form, the fluid passes through a metering unit to a dispenser gun having a manually operated trigger. The metering unit responds to trigger operation to deliver a metered volume of the fluid to the dispenser gun for dispensing via a spout. The system is designed for quickly and easily dispensing a rapid succession of accurately metered volumes. The dispenser system is particularly suited for use in dispensing condiments in a fast food restaurant environment, or for dispensing metered volumes of paints and/or pigments used in mixing paints, or for handling other flowable materials such as adhesives and the like.
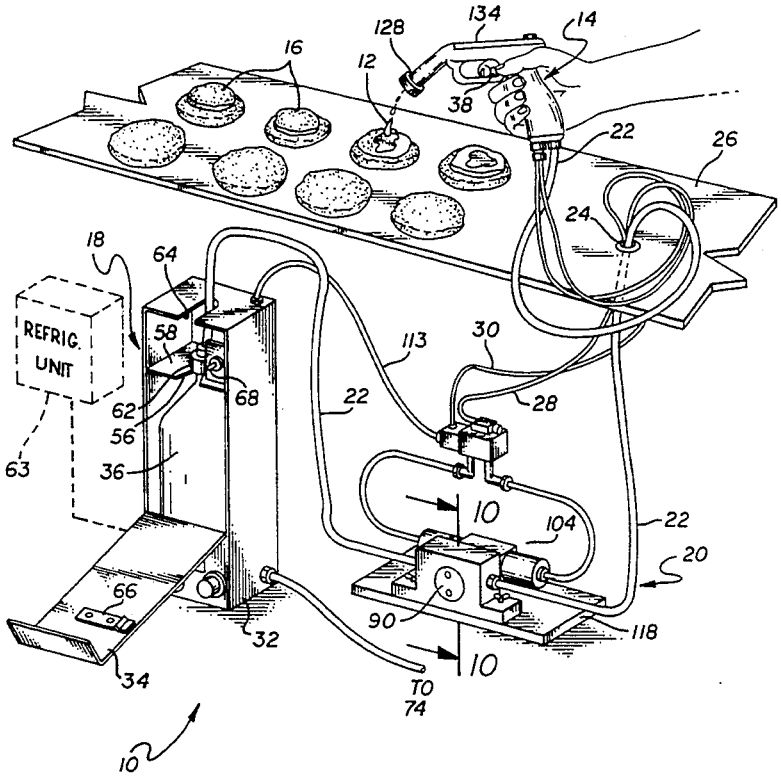
42 Claims, 6 Drawing Sheets