AERIAL PROSPECTING

Filed Sept. 27, 1967 2 Sheets-Sheet 1

FIG. 1

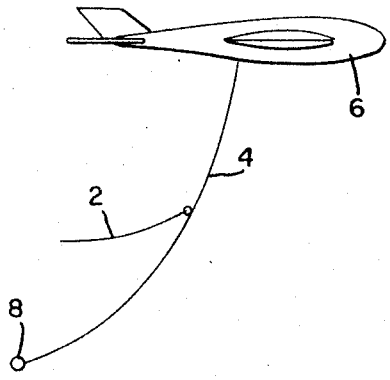

FIG. 2

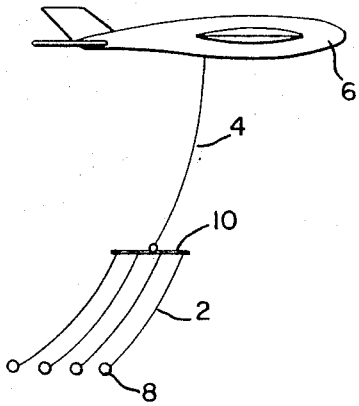

FIG. 3

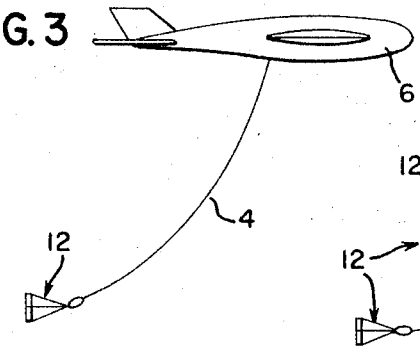

FIG. 4

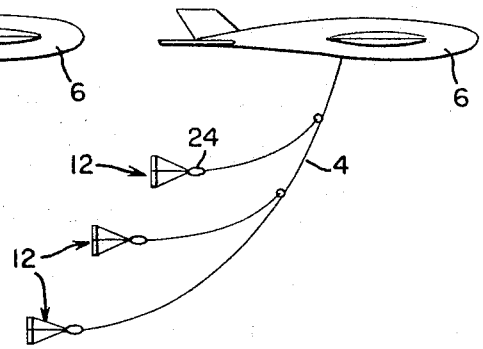

FIG. 5

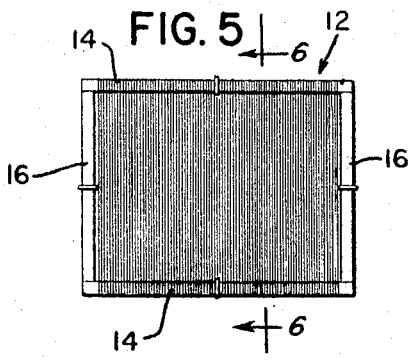

FIG. 6

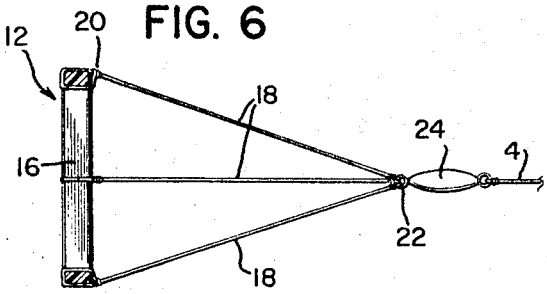

INVENTOR,
OSCAR WEISS

BY Kemon, Palmer, Stewart + Estabrook
ATTORNEYS