US005347295A

United States Patent [19]

Agulnick et al.

[11] Patent Number: 5,347,295

[45] Date of Patent: Sep. 13, 1994

[54] CONTROL OF A COMPUTER THROUGH A POSITION-SENSED STYLUS

[75] Inventors: **Todd Agulnick**, Newton Centre, Mass.; **Robert Carr**, San Francisco, Calif.; **Tony Hoeber**, Woodside, Calif.; **S. Jerrold Kaplan**, San Francisco, Calif.; **David R. Low**, Oakland, Calif.; **Michael Ouye**, Palo Alto, Calif.

[73] Assignee: **GO Corporation**, Foster City, Calif.

[21] Appl. No.: **610,231**

[22] Filed: **Oct. 31, 1990**

[51] **Int. Cl.**[5] **G09G 5/00**

[52] **U.S. Cl.** **345/156**; 345/179

[58] **Field of Search** 382/13, 14, 57, 59, 382/40; 178/18, 19; 340/706, 707, 709; 345/156, 179

[56] **References Cited**

U.S. PATENT DOCUMENTS

3,699,439	10/1972	Turner	324/71.1
3,832,693	8/1974	Ishizaki et al.	364/900
4,016,542	4/1977	Azure	364/900
4,055,726	10/1977	Turner et al.	178/18
4,071,691	1/1978	Pepper, Jr.	178/19
4,112,415	9/1978	Hilbrink	382/13
4,129,747	12/1978	Pepper, Jr.	178/18
4,177,354	12/1979	Mathews	178/19
4,184,147	1/1980	Seelbach	382/13
4,198,539	4/1980	Pepper, Jr.	178/18
4,262,281	4/1981	Buckle et al.	382/13
4,293,734	10/1981	Pepper, Jr.	178/18
4,302,011	11/1981	Pepper, Jr.	178/19
4,318,096	3/1982	Thornburg et al.	360/706
4,353,552	10/1982	Pepper, Jr.	382/13
4,365,235	12/1982	Greanias et al.	382/13
4,371,746	2/1983	Pepper, Jr.	178/18
4,456,787	6/1984	Schlosser et al.	178/19
4,475,239	10/1984	van Raamsdonk	382/52
4,520,357	5/1985	Castleberry et al.	340/703
4,641,354	2/1987	Fukunaga et al.	382/13
4,672,677	6/1987	Yamakawa	382/13
4,679,241	7/1987	Lukis	382/13
4,680,430	7/1987	Yoshikawa et al.	178/19
4,680,804	7/1987	Kuzunuki et al.	382/13
4,764,885	8/1988	Greanias et al.	364/571
4,786,765	11/1988	Yamanami et al.	178/19
4,831,556	5/1989	Oono	364/521
4,839,634	6/1989	More et al. .	
4,972,496	11/1990	Sklarew	382/13
5,050,105	9/1991	Peters	340/734
5,053,758	10/1991	Cornett et al.	340/712
5,151,950	9/1992	Hullender .	

FOREIGN PATENT DOCUMENTS

0203324	3/1986	European Pat. Off. .	
0242598	10/1987	European Pat. Off. .	
0254561	1/1988	European Pat. Off. .	
2117154	10/1983	United Kingdom .	
2193023	1/1988	United Kingdom	382/13

OTHER PUBLICATIONS

IBM Technical Disclosure Bulletin, "Object-Picking Method by Hierarchical Hand-Marking," vol. 30, No. 9, pp. 348-350, Feb. 1988 (New York).

GRiD Systems Corporation, "GRiDPAD Computer Owner's Guide" (1989-1990, California).

Wacom Co., Ltd., "User Manual for SD-510 A5 Type Digitizer" (Jul. 1988; place of publication unknown).

Linus Technologies, Inc., LINUS Write-Top User's Guide (1987 Virginia).

PC Magazine, "Digitizing Tablets/Pointing the Way to Easier Input" by Winn L. Rosch (1989 U.S.A.).

Primary Examiner—Jeffery Brier

Attorney, Agent, or Firm—Matthew C. Rainey; Amir H. Raubvogel

[57] **ABSTRACT**

A notebook computer which is controlled by a stylus executing gestures on the computer screen. The stylus and the computer include complementary electronic circuitry by which the proximity of the stylus tip to the computer is sensed. The proximity sensing is used to detect to approach of the stylus tip to the computer screen, and gestural commands are then entered on the screen by moving the stylus. The entry of a command is terminated by removing the stylus tip from proximity with the screen, which is detected by the computer, which then implements the command. Alternative methods of implementing the commands include time-outs and command termination buttons.
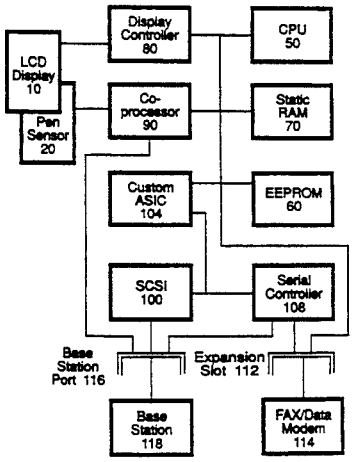
46 Claims, 73 Drawing Sheets