US007441495B2

(12) **United States Patent**
Hallé et al.

(10) **Patent No.: US 7,441,495 B2**
(45) **Date of Patent: Oct. 28, 2008**

(54) **SYSTEMS USEFUL FOR BEVERAGE MAKING MACHINES**

(75) Inventors: **Patrick Hallé**, Laval (CA); **Robert Declos**, Saint-Hyacinthe (CA); **Patrick Brazeau**, LeGardeur (CA); **Martin Harnois**, Sainte Julie (CA); **Pascal Grenier**, Iberville (CA); **Denis Haché**, Beloeil (CA); **Joé Normandeau**, Delson (CA); **André Gauthier**, St-Bruno-de-Montarville (CA); **Roger Bourgouin**, Saint-Hubert (CA); **Stephen Grant**, Montreal (CA); **Réjean Bouiliane**, Carignan (CA); **Eric Thériault**, Chambly (CA)

(73) Assignee: **VKI Technologies, Inc.**, Saint-Hubert, Quebec (CA)

(*) Notice: Subject to any disclaimer, the term of this patent is extended or adjusted under 35 U.S.C. 154(b) by 0 days.

(21) Appl. No.: **11/493,106**

(22) Filed: **Jul. 26, 2006**

(65) **Prior Publication Data**

US 2006/0261085 A1 Nov. 23, 2006

Related U.S. Application Data

(62) Division of application No. 10/705,411, filed on Nov. 10, 2003, now abandoned.

(30) **Foreign Application Priority Data**

Nov. 8, 2002 (CA) 2411809

(51) **Int. Cl.**
A47J 31/00 (2006.01)

(52) **U.S. Cl.** **99/295**; 99/299; 141/351

(58) **Field of Classification Search** 141/255, 141/301, 349–351, 369; 99/295, 299
See application file for complete search history.

(56) **References Cited**

U.S. PATENT DOCUMENTS

2,183,837	A	12/1939	Hamilton et al.	
2,911,901	A	11/1959	Totten et al.	
3,046,869	A	7/1962	Reynolds	
3,072,299	A	1/1963	Colell	
3,586,214	A	6/1971	Diebel	
3,682,090	A	8/1972	Meriggi	
4,191,101	A	3/1980	Ogawa et al.	
4,357,861	A	11/1982	Di Girolamo	
4,541,552	A	9/1985	Scheithauer	
4,665,808	A	5/1987	Pulvermuller	
5,133,247	A *	7/1992	Pastrick	99/295
5,421,491	A	6/1995	Tuvim et al.	

(Continued)

FOREIGN PATENT DOCUMENTS

CA	1144117	5/1983
EP	0 331 271 A1	9/1989
EP	0 640 311 A1	3/1995
EP	1 224 894 A18	7/2002

(Continued)

Primary Examiner—Timothy L Maust
(74) *Attorney, Agent, or Firm*—Fay Sharpe LLP

(57) **ABSTRACT**

Various systems are provided which may be used in a beverage machine for dispensing one or more, (in particular a plurality of) beverage types. A beverage machine may thus comprise one or more systems selected from the group consisting of

i) a conveyance system for the dispensing of particulate material;

ii) a beverage selection system providing for the possibility of selecting from among a class of beverages; and

iii) a hot water dispensing system which may have a system for detecting the absence of water in the fluid conduit component thereof.
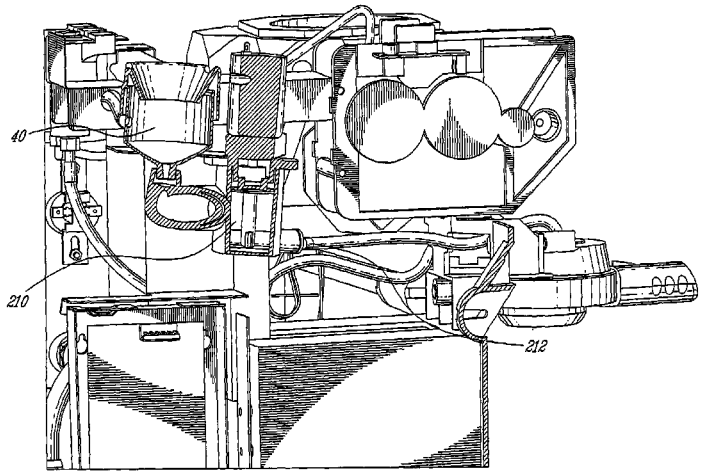
32 Claims, 19 Drawing Sheets