March 15, 1966 T. D. STEINWAY 3,240,095

PIANO ACTION BUSHING ASSEMBLY

Filed March 5, 1962

FIG. 1

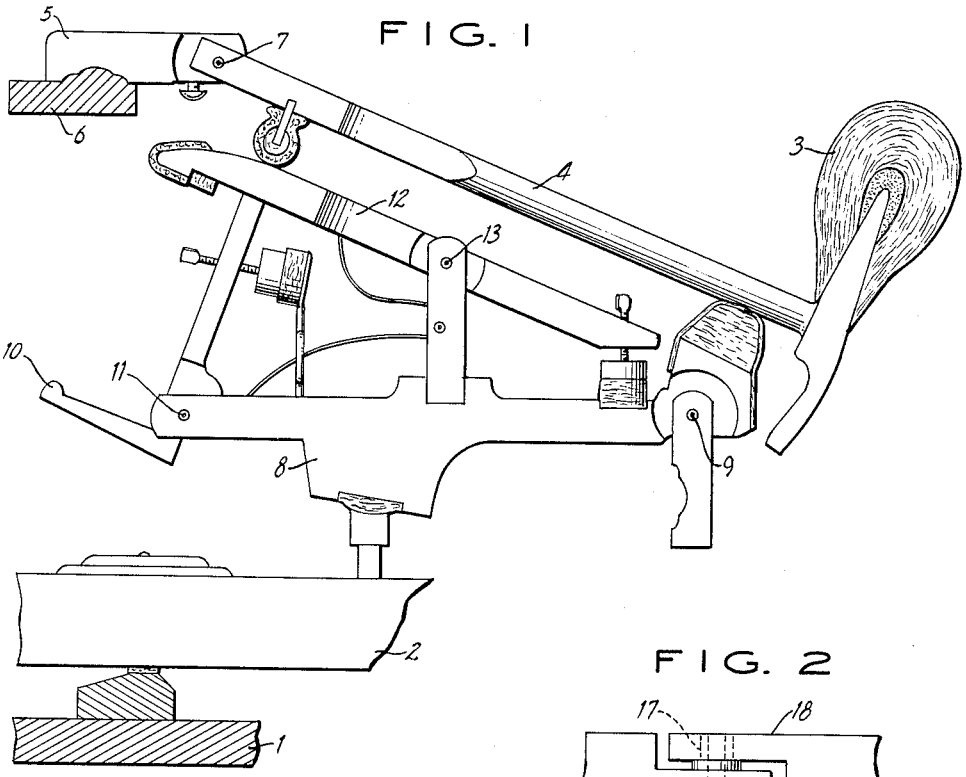

FIG. 2

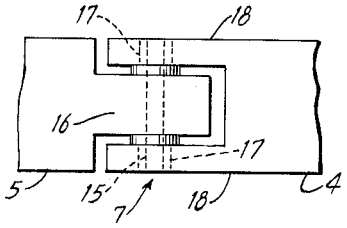

FIG. 3

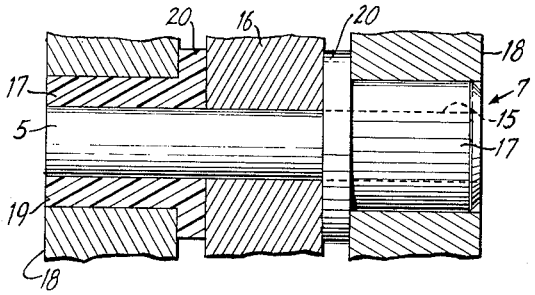

FIG. 4

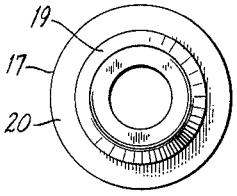

INVENTOR.
THEODORE D. STEINWAY

BY

Morgan, Finnegan, Durham & Pine
ATTORNEYS