US007639795B2

(12) **United States Patent**
Otani et al.

(10) **Patent No.: US 7,639,795 B2**
(45) **Date of Patent: Dec. 29, 2009**

(54) **HINGE DEVICE AND METHOD FOR WIRELESS COMMUNICATION DEVICE**

(75) Inventors: **Kazuyoshi R. Otani**, San Diego, CA (US); **Eugene Chekal**, San Diego, CA (US)

(73) Assignee: **Kyocera Corporation**, Kyoto (JP)

(*) Notice: Subject to any disclaimer, the term of this patent is extended or adjusted under 35 U.S.C. 154(b) by 402 days.

(21) Appl. No.: **11/613,132**

(22) Filed: **Dec. 19, 2006**

(65) **Prior Publication Data**

US 2008/0146273 A1 Jun. 19, 2008

(51) **Int. Cl.**
H04M 1/00 (2006.01)
H04M 9/00 (2006.01)

(52) **U.S. Cl.** **379/433.13**; 379/428.01; 379/434; 455/575.3

(58) **Field of Classification Search** 455/575.3, 455/575.1; 379/428.01, 433.01, 433.13, 379/434

See application file for complete search history.

(56) **References Cited**

U.S. PATENT DOCUMENTS

294,746 A 3/1884 Straup et al.
6,330,996 B1 12/2001 Yo et al.
6,671,929 B1 1/2004 Lu
7,016,712 B2 * 3/2006 Newman et al. 455/575.3
7,196,672 B2 * 3/2007 Iwai et al. 343/702
7,483,723 B2 * 1/2009 Soderlund 455/575.1
2003/0162509 A1 8/2003 Bae et al.
2004/0078932 A1 4/2004 Su
2004/0154130 A1 8/2004 Lee et al.
2006/0143863 A1 7/2006 Schoolcraft et al.
2009/0000062 A1 * 1/2009 Yamanami 16/366

FOREIGN PATENT DOCUMENTS

JP 1997-112514 5/1997
JP 1997-114162 5/1997
JP 2004-226530 8/2004
JP 2005-106117 4/2005

* cited by examiner

Primary Examiner—Curtis Kuntz
Assistant Examiner—Phylesha Dabney

(57) **ABSTRACT**

A wireless communication device includes a first housing member, a second housing member, and a S hinge pivotally connecting the first housing member to the second housing member. In certain embodiments, the S hinge comprises a left tail connected at one end to a single location along a first edge of the first housing member, and a right tail connected at one end to a second end of the left tail. The right tail is further connected at a second end to a single location along a first edge of the second housing member.
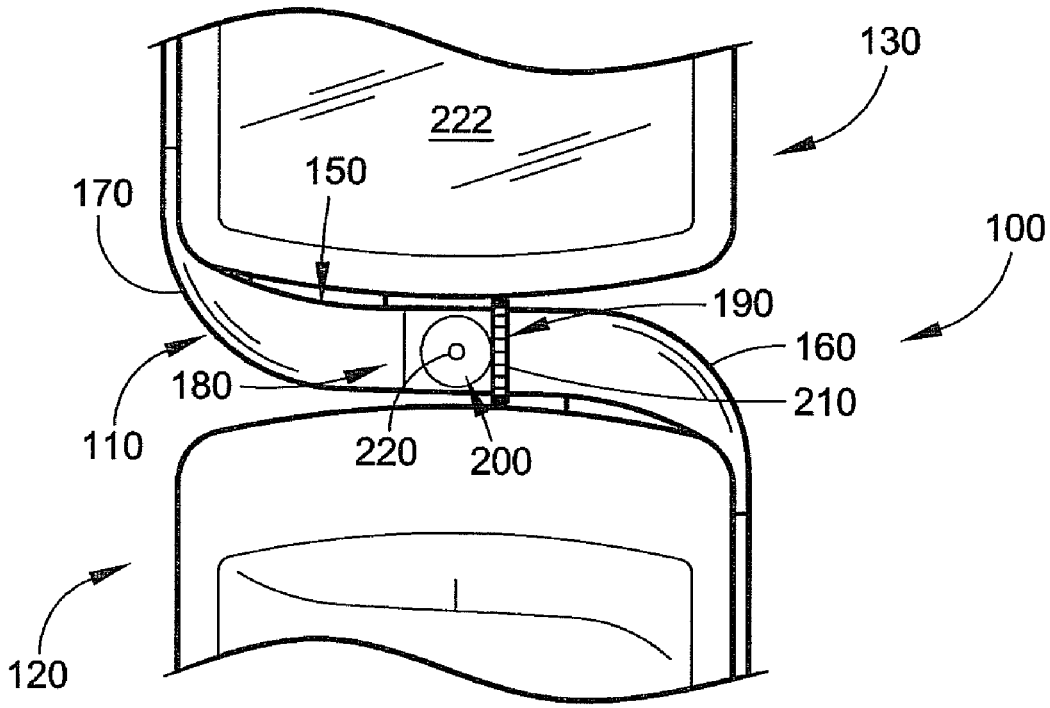
14 Claims, 1 Drawing Sheet