US005235495A

United States Patent [19]

Blair et al.

[11] Patent Number: 5,235,495

[45] Date of Patent: Aug. 10, 1993

[54] PEN-BASED COMPUTER WITH HANDLE/PROP HAVING RATCHET LOCKING MECHANISM

[75] Inventors: **William A. Blair**, Worcester, Mass.; **Scott J. Dankman**, Reston, Va.

[73] Assignee: **Telepad Corporation**, Reston, Va.

[21] Appl. No.: **947,431**

[22] Filed: **Sep. 21, 1992**

[51] **Int. Cl.**[5] **H05K 5/02**; G06F 1/16

[52] **U.S. Cl.** **361/680**; 361/683; 361/740; 220/756; 220/762; 16/126; 248/674; 74/523; 74/527; 74/528

[58] **Field of Search** ..... 220/756, 761, 762, 763, 220/764; 16/126, 321-326; 248/455, 674; 74/523, 527, 528, 536; 361/380, 390, 391-395, 427-429, 399; 364/708; 312/223.1, 223.2, 244; 235/1 D

[56] **References Cited**

U.S. PATENT DOCUMENTS

2,388,567	11/1945	Patterson, Jr.	220/756 X
3,878,964	4/1975	Fogle	220/756
3,924,775	12/1975	Andreaggi et al.	220/756
4,089,464	5/1978	Teti, Jr. et al.	16/126 X
4,196,821	4/1980	Teti, Jr. et al.	16/126 X
4,669,053	5/1987	Krenz	364/708
4,951,241	8/1990	Hosoi et al.	364/708
4,964,018	10/1990	Mallory et al.	361/391
5,049,862	9/1991	Dao et al.	340/706
5,100,098	3/1992	Hawkins	248/917
5,168,601	12/1992	Liu	16/126

Primary Examiner—Leo P. Picard
Assistant Examiner—Michael W. Phillips
Attorney, Agent, or Firm—Antonelli, Terry, Stout & Kraus

[57] **ABSTRACT**

An improved handle/prop is provided for a pen-based computer wherein the handle/prop is pivotally mounted to opposite side edges of the computer. The handle/prop can be pivoted and locked into a plurality of different positions. In particular, these positions are selected to facilitate carrying the computer, supporting the computer on a flat surface in one or more inclined positions for writing and/or viewing, and holding the computer during writing. A ratchet locking mechanism is provided for locking the handle/prop into the plurality of different positions. This ratchet locking mechanism includes first and second release buttons located at points where the handle/prop pivotally connects at opposite side edges of the computer. In addition, the ratchet locking mechanism includes a handle-tie piece extending through the interior of the computer to spring bias the release button into a locked position.
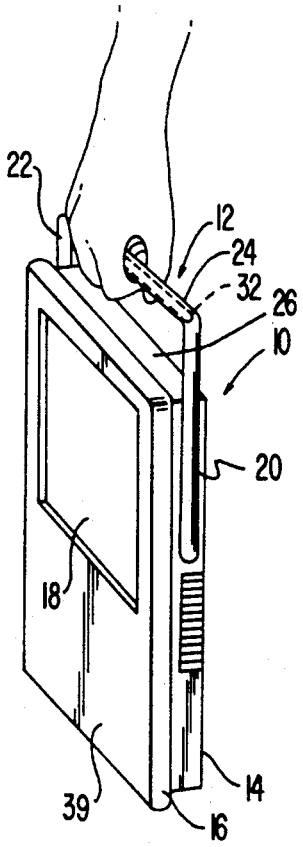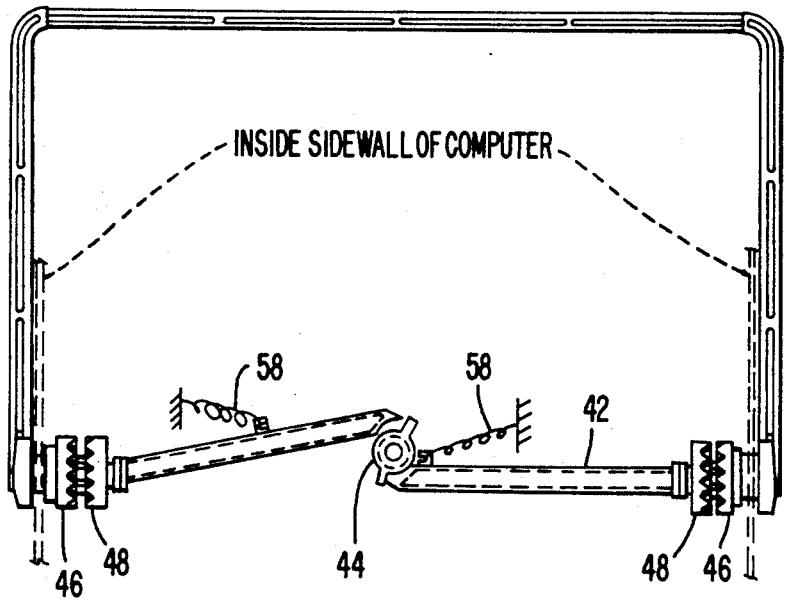
28 Claims, 3 Drawing Sheets