US007233895B2

(12) **United States Patent**
Petty

(10) **Patent No.: US 7,233,895 B2**
(45) **Date of Patent: Jun. 19, 2007**

(54) **APPARATUS AND METHOD TO COMPENSATE FOR UNSYNCHRONIZED TRANSMISSION OF SYNCHROUS DATA USING A SORTED LIST**

(75) Inventor: **Norman W. Petty**, Columbia Falls, MT (US)

(73) Assignee: **Avaya Technology Corp.**, Basking Ridge, NJ (US)

(*) Notice: Subject to any disclaimer, the term of this patent is extended or adjusted under 35 U.S.C. 154(b) by 1085 days.

(21) Appl. No.: **10/159,438**

(22) Filed: **May 30, 2002**

(65) **Prior Publication Data**

US 2003/0223443 A1 Dec. 4, 2003

(51) **Int. Cl.**
G10L 11/02 (2006.01)
H04J 3/17 (2006.01)

(52) **U.S. Cl.** **704/215**; 370/505; 370/516

(58) **Field of Classification Search** 704/201, 704/210, 215, 226; 370/503, 504, 516, 519; 375/240.11, 240.21
See application file for complete search history.

(56) **References Cited**

U.S. PATENT DOCUMENTS

5,063,444 A * 11/1991 Knauer et al. 375/240.11
5,659,541 A * 8/1997 Chan 370/236
5,790,538 A 8/1998 Sugar
5,793,772 A * 8/1998 Burke et al. 370/508
6,144,696 A * 11/2000 Shively et al. 375/222
6,157,653 A 12/2000 Kline et al.
6,259,677 B1 7/2001 Jain
6,285,708 B1 * 9/2001 Shively et al. 375/222
6,580,694 B1 * 6/2003 Baker 370/252
7,006,511 B2 * 2/2006 Lanzafame et al. 370/412
7,133,411 B2 * 11/2006 Petty 370/412
2002/0016161 A1 * 2/2002 Dellien et al. 455/403
2002/0044597 A1 * 4/2002 Shively et al. 375/222
2002/0105375 A1 * 8/2002 Sorokine 329/345
2003/0013457 A1 * 1/2003 Amerga et al. 455/456
2003/0191631 A1 * 10/2003 Chan et al. 704/201
2004/0076191 A1 * 4/2004 Sundqvist et al. 370/516

OTHER PUBLICATIONS

U.S. Appl. No. 10/159,622, filed May 30, 2002, Norman Petty.

* cited by examiner

Primary Examiner—Martin Lerner
(74) *Attorney, Agent, or Firm*—John C. Moran

(57) **ABSTRACT**

A low energy detector maintains a sorted list that defines to the circuit removing samples from the queue the location and energy of all samples that fall below the predetermined energy level. This allows a circuit removing samples to execute an algorithm that allows samples to be deleted in accordance with a predetermined pattern.
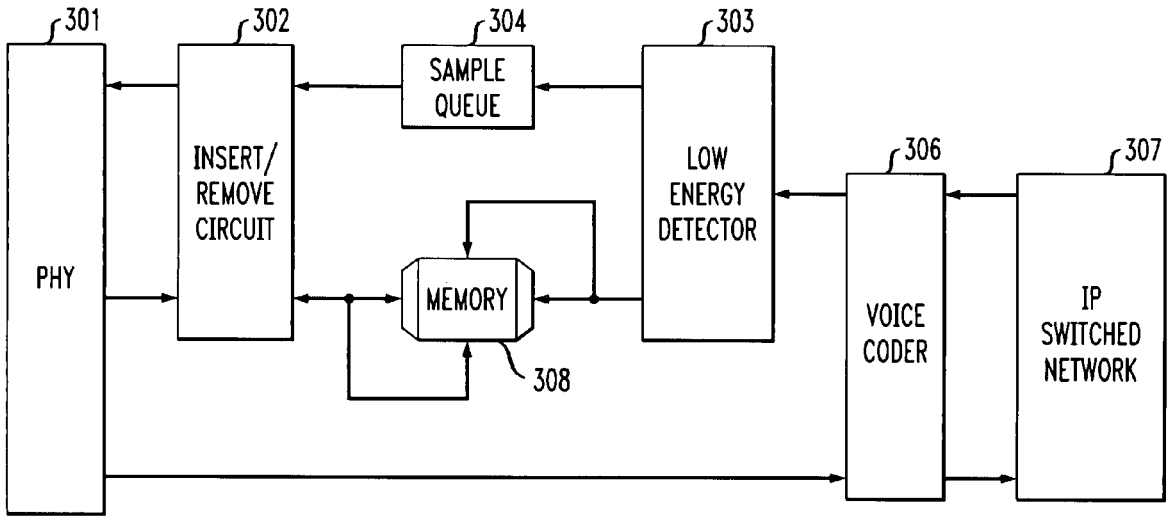
15 Claims, 12 Drawing Sheets