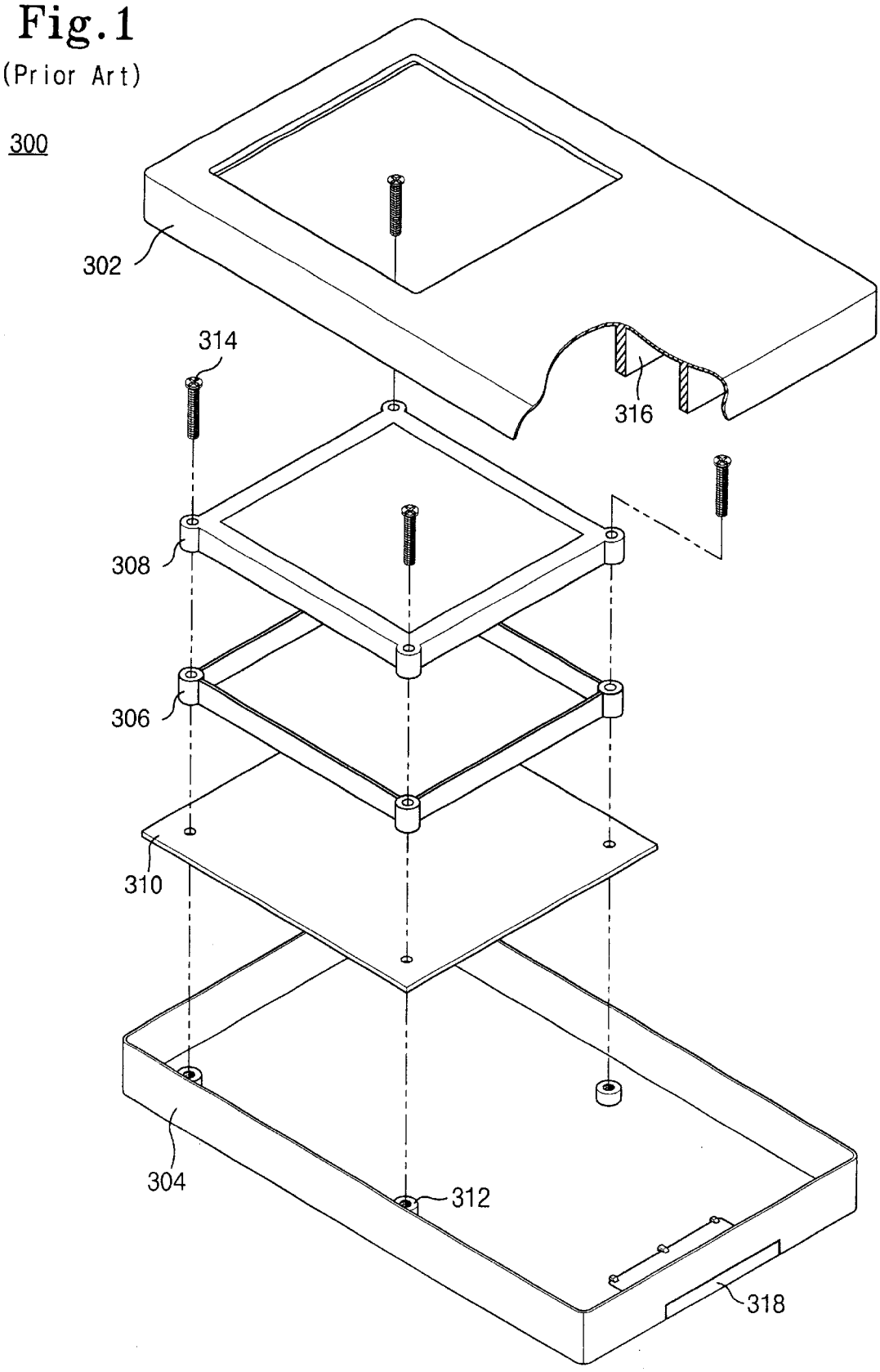Fig.1
(Prior Art)