United States Patent [19]

Roskilly

[11] **Patent Number: 4,821,895**

[45] **Date of Patent: Apr. 18, 1989**

[54] **NURSING BOTTLE ACCESSORY HAVING MEANS FOR THE INTRODUCTION OF A SEPARATE SUBSTANCE**

[76] Inventor: **Stephen Roskilly,** 32 Rayden Drive, Borrowdale, Harare, Zimbabwe

[21] Appl. No.: **1,483**

[22] Filed: **Jan. 8, 1987**

[30] **Foreign Application Priority Data**

Jan. 8, 1986 [ZW] Zimbabwe 3/86

[51] **Int. Cl.**[4] **A61J 9/00**

[52] **U.S. Cl.** ..... **215/11.1;** 215/100 R; 215/228; 215/DIG. 8

[58] **Field of Search** ..... 215/11 R, 11 C, 118, 215/11 D, 100 R, 1 R, 228, DIG. 8, 11.1, 11.4, 11.5, 11.6; 128/359, 360; 604/83, 77, 78; 222/145; D24/46–48

[56] **References Cited**

U.S. PATENT DOCUMENTS

D. 138,925	9/1944	Ostrin et al.	D24/47
2,680,441	6/1954	Krammer	215/11 R X
2,931,731	4/1960	Pohjola	215/11 R X
3,302,644	2/1967	Kennedy et al.	604/78
3,426,755	2/1969	Clegg	604/77
3,645,262	2/1972	Harrigan	215/114 R X
3,682,344	8/1972	Lopez	215/DIG. 8 X
4,581,013	4/1986	Allen	604/77 X

FOREIGN PATENT DOCUMENTS

1038319	5/1953	France	215/11 R

Primary Examiner—Sue A. Weaver

Attorney, Agent, or Firm—Cushman, Darby & Cushman

[57] **ABSTRACT**

The invention relates to a feeding bottle accessory wherein provision is made for the introduction into the bottle teat of material independently of and in addition to the contents of the bottle. The provision preferably includes a syringe assembly.
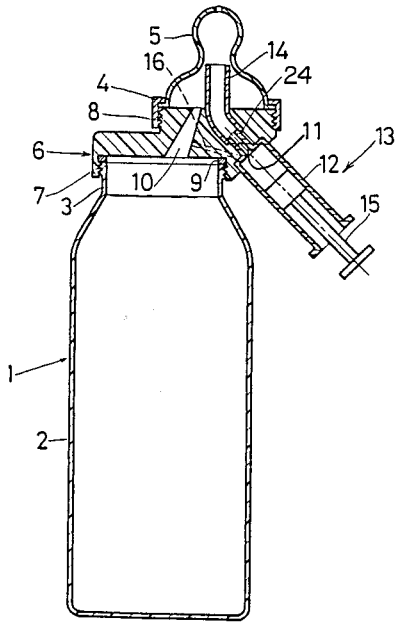
8 Claims, 3 Drawing Sheets