FIG. 1

CONVENTIONAL DEVICE

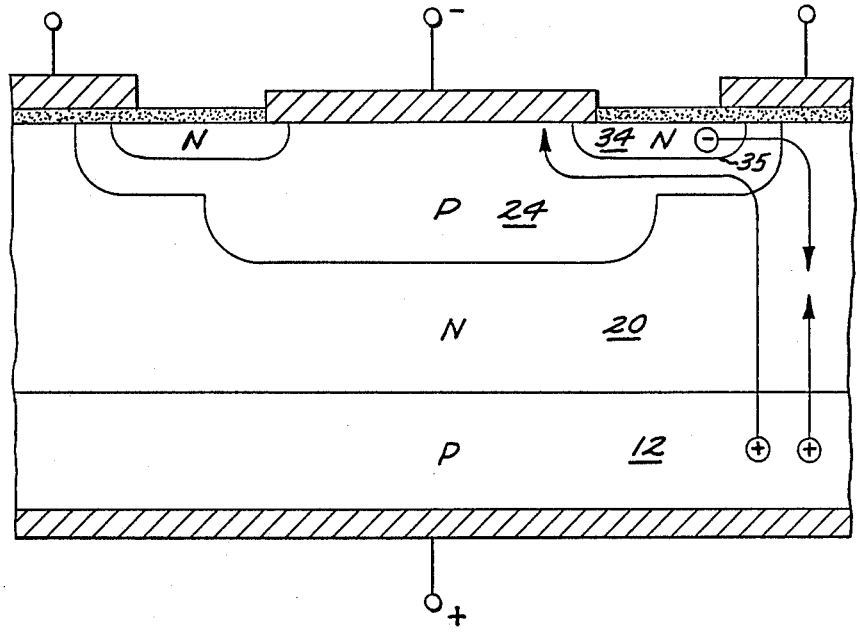
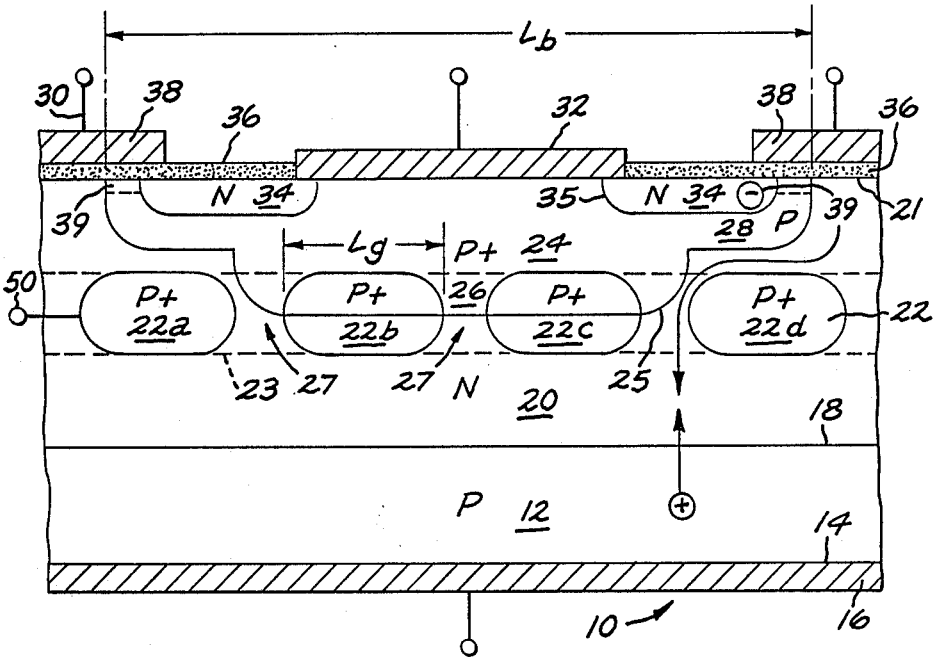
FIG. 2