May 23, 1967 R. A. PETERSON ETAL 3,320,895

SPRAYING APPARATUS WITH PUMP AND MOTOR ADJUSTMENT

Filed Jan. 14, 1965 2 Sheets-Sheet 1

Fig. 1.

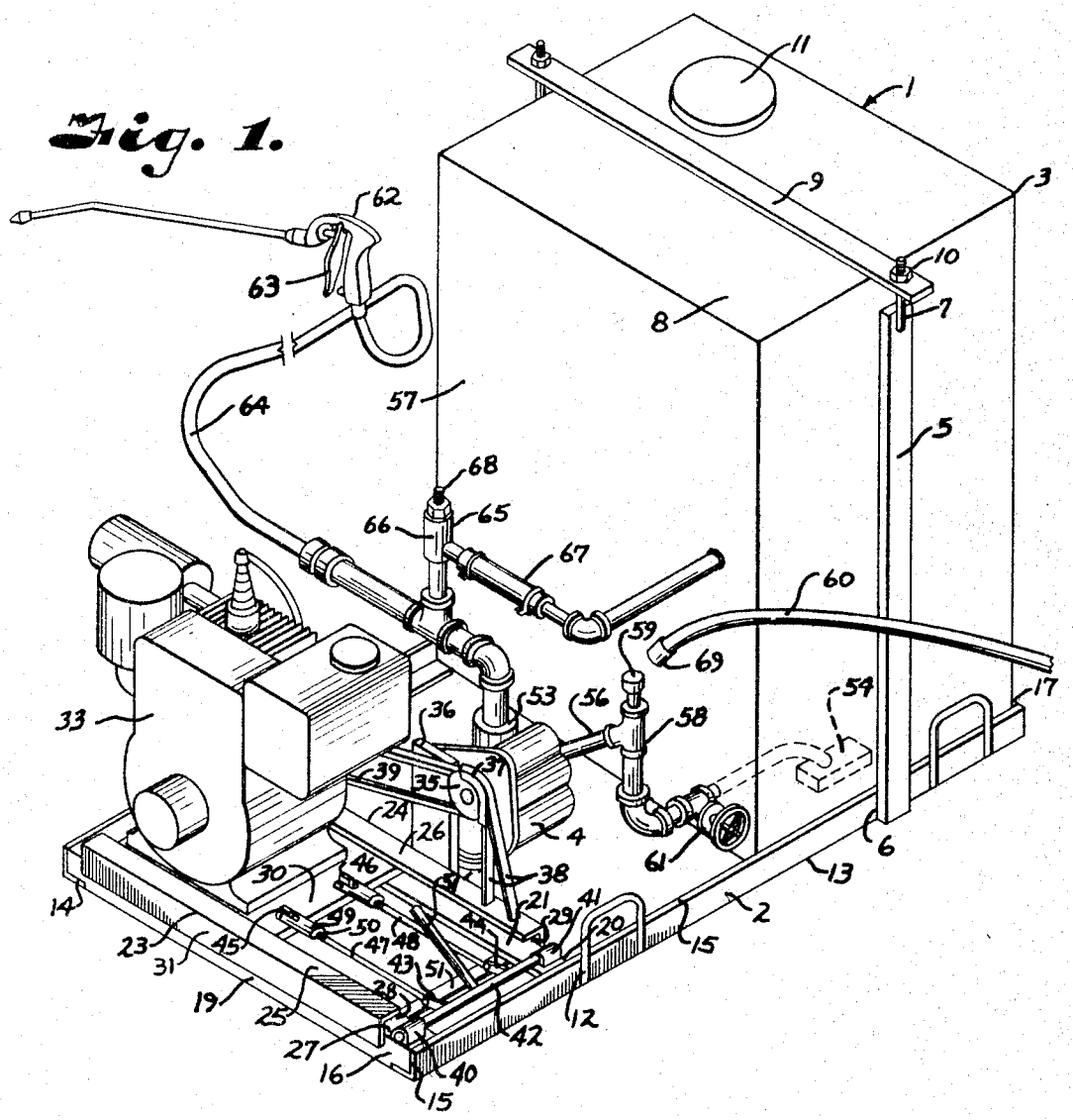

INVENTOR.
RICHARD A. PETERSON
BY and GARLAND R. PETERSON
Frishburn and Gold
ATTORNEYS