TAPE APPLICATOR

Filed April 27, 1960 3 Sheets-Sheet 1

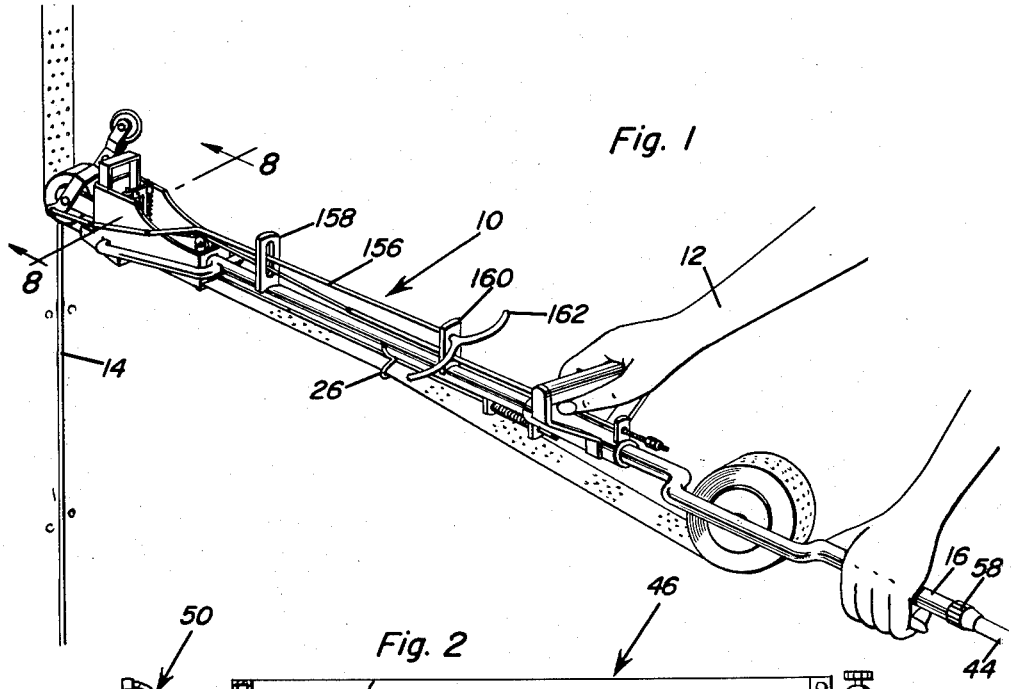

Fig. 1

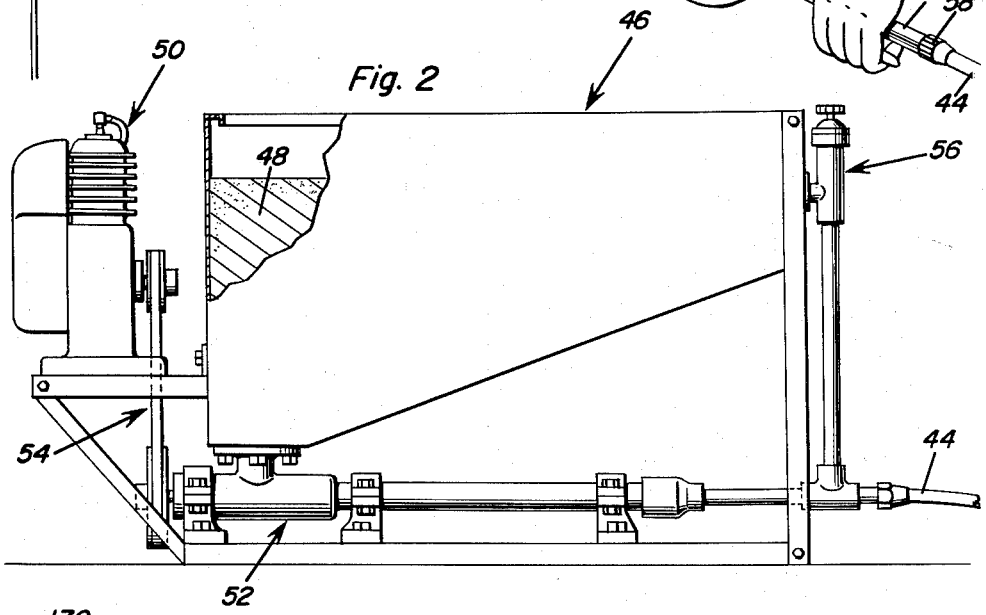

Fig. 2

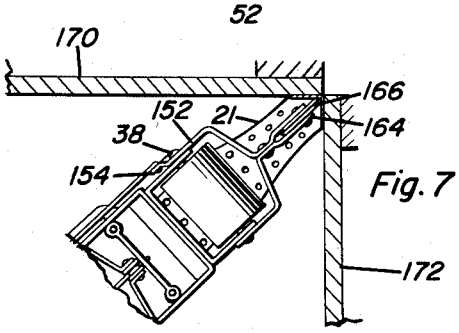

Fig. 7

Wesley D. Lathrop
Alfred L. Castle
INVENTORS

BY Clarence A. O'Brien and Harvey B. Jacobson
Attorneys