US009411395B2

(12) **United States Patent**
Rosenzweig et al.

(10) **Patent No.: US 9,411,395 B2**
(45) **Date of Patent: Aug. 9, 2016**

(54) **METHOD AND APPARATUS TO CONTROL CURRENT TRANSIENTS IN A PROCESSOR**

(71) Applicant: **Intel Corporation**, Santa Clara, CA (US)

(72) Inventors: **Nir Rosenzweig**, Givat Ella (IL); **Zeev Sperber**, Zichron Yackov (IL); **Efraim Rotem**, Haifa (IL)

(73) Assignee: **Intel Corporation**, Santa Clara, CA (US)

(*) Notice: Subject to any disclaimer, the term of this patent is extended or adjusted under 35 U.S.C. 154(b) by 437 days.

(21) Appl. No.: **13/865,463**

(22) Filed: **Apr. 18, 2013**

(65) **Prior Publication Data**

US 2014/0317422 A1 Oct. 23, 2014

(51) **Int. Cl.**
G06F 1/32 (2006.01)
G06F 1/26 (2006.01)

(52) **U.S. Cl.**
CPC ***G06F 1/3206*** (2013.01); ***G06F 1/324*** (2013.01); ***G06F 1/3296*** (2013.01); *G06F 1/26* (2013.01); *Y02B 60/1217* (2013.01); *Y02B 60/1285* (2013.01)

(58) **Field of Classification Search**
CPC G06F 1/26; G06F 1/3206; G06F 1/324; G06F 1/3296; Y02B 60/1217; Y02B 60/1285
USPC 713/300
See application file for complete search history.

(56) **References Cited**

U.S. PATENT DOCUMENTS

4,787,031 A * 11/1988 Karger et al. 718/100
5,926,645 A * 7/1999 Williamson G06F 9/30043 712/215
2002/0108028 A1* 8/2002 Nunoe G06F 9/30181 712/233
2003/0084256 A1* 5/2003 McKee 711/152
2004/0205326 A1* 10/2004 Sindagi G06F 9/30072 712/226
2005/0132243 A1* 6/2005 Edwards H03K 19/00369 713/300
2008/0072079 A1* 3/2008 Bieswanger et al. 713/300
2009/0300329 A1* 12/2009 Naffziger G06F 1/3203 712/205
2010/0083009 A1 4/2010 Rotem et al.
2011/0231635 A1* 9/2011 Egger G06F 9/30014 712/220

(Continued)

FOREIGN PATENT DOCUMENTS

EP 2515200 10/2012

OTHER PUBLICATIONS

International Application No. PCT/US2011/068120, filed Dec. 30, 2011, entitled, "Multi-Level CPU High Current Protection," by Intel Corporation.

(Continued)

Primary Examiner — Thomas Lee
Assistant Examiner — Volvick Derose
(74) *Attorney, Agent, or Firm* — Trop, Pruner & Hu, P.C.

(57) **ABSTRACT**

In an embodiment, a processor includes at least one core. The at least one core includes an execution unit and a current protection (IccP) controller. The IccP controller may receive instruction width information associated with one or more instructions of an instruction queue prior to execution of the instructions by the execution unit. The IccP controller may determine an anticipated highest current level (Icc) for the at least one core based on the instruction width information. The IccP controller may generate a request for a first license for the at least one core that is associated with the Icc. Other embodiments are described and claimed.
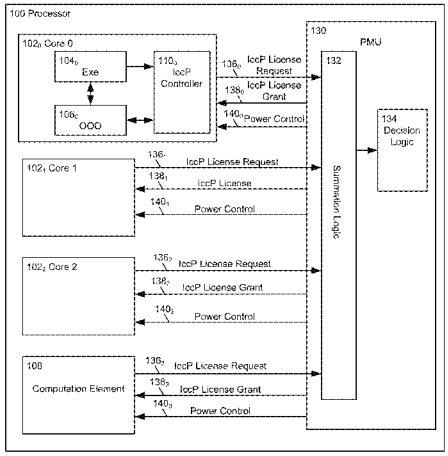
23 Claims, 9 Drawing Sheets